SONY

Sony Manufacturing Systems Corporation

Sony Manufacturing Systems Corporation
Sales and Marketing Dept.
45 Suzukawa, Isehara-shi, Kanagawa 259-1146, Japan
Tel: +81-463-92-7971 Fax: +81-463-92-7978
http://www.sonysms.co.jp

Sony Taiwan Limited
FA Marketing Group
6F, 145 Changchun Road Taipei 104, Taiwan
Tel: +886-2-2522-9760 Fax: +886-2-2522-2396
http://www.sony.com.tw/company/family/FA/FA.asp

Sony Manufacturing Systems America, Inc.
20381 Hermana Circle, Lake Forest, CA 92630
Tel: +1-949-770-8400 Fax:+1-949-770-8408 http://www.sonysms.com

Sony Manufacturing Systems Europe
Headquarters
Semiconductor & Electronic Solutions A division of Sony United Kingdom Ltd.
The Heights, Brooklands, Weybridge, Surrey KT13 0XW, UK
Tel: +44-870-7390122 Fax: +44-1932-817024
Stuttgart Office
Hedelfinger Strasse 61, D-70327 Stuttgart, Germany
Tel: +49-711-5858-777 Fax: +49-711-580-715
http://www.sonymanufacturing.com

http://www.sonysms.co.jp/

The contents of this literature updated May 2007

Used material: 100% recycled paper, recyclable.
Zero-VOC (Volatile Organic Compound) vegetable oil ink.

036E-0706-02-01

SONY

High speed data recorder general catalog
SIR-3000 Series

High Speed **Data Recorder**

Sony Manufacturing Systems Corporation

Our Isehara Plant is ISO9001 certified.

Capture the moment!

In research and development fields today, your time for actual test data collection is getting shorter and shorter. More channels, wider bandwidth....and no failure in capturing measurement signals in order to avoid repetition of tests. Sony has been in the data recording business for over 40 years and our experience and expertise have gone into making the SIR-3000 Series data recorders. Quality of recorded signals, reliability and intuitively easy operations are what data recorders are for. The SIR-3000 Series data recorders help you to improve your efficiency in test data collection.

High Speed **Data Recorder**

SIR-3000 Series

The SIR-3000 Series data recorder sets a new standard in test and measurement data recording.

The evaluation tests of vibrations, shocks, acoustics/noises, and stress/strain in advance engineering fields such as aerospace, energy, and high-speed railway, require fast and large volumes of data that exceed the analytical capacities of computers. Sony's SIR-3000 Series of data recorders integrate exceptional reliability with high-speed and high-volume data recording.

Our unique PCscan V viewer software allows you to instantly find the data you are looking for and create files in desired sizes. With a combination of the SIR-3000 Series of recorders and the PCscan V software, an efficient data collection and analysis system can be easily configured and users can dramatically reduce the time needed for the data collection and analytical process.

Sony continues to be a data recording front runner in some of the most advanced engineering research and development fields around the world.

Applications	Rockets, airplanes, railroads, jet engines, turbines
Measurement signals	Vibration, shock, acoustic/noise, stress/strain

The SIR-3000 Series' key features

High-speed recording	: 128ch/20kHz. Four times faster than its predecessor (SIR-3400H)
Large capacity	: 200GB hard disk drive (SIR-3400H) / 80GB AIT (SIR-3100T)
Multi-channel	: Up to 128 channels on a single medium
Wide bandwidth	: 32ch/80kHz (SIR-3400H/SIR-3032W)
Long recording time	: 256 hours (10 days) of measurement signal recording at 32ch/1.25kHz (SIR-3400H)
Analog performance	: 86dB dynamic range
High reliability	: Integrated UPS provides back-up against a momentary power supply failure. 10G vibration resistance (SIR-3100T/SSM-3010). Dust resistance is doubled from the predecessor.
Low media costs	: Per-Byte cost reduced to almost 1/4 using low-priced and high-capacity AIT-2 Turbo tapes. In comparison with AIT-1 tapes (SIR-3100T)

Wide range of product line-up to fit your applications

Select your recording unit by media type – hard disk or tape.

- If you want to retrieve the collected data instantly, choose the hard disk drive model SIR-3400H.
- For instantaneous archive applications, choose the tape model SIR-3100T.

Select your measuring unit by bandwidth

- SIR-3032W for a bandwidth up to 80kHz.
- SIR-3032i for a bandwidth up to 20kHz.

Recording unit

SIR-3400H

Recording unit
SIR-3400H

Measuring unit
SIR-3032W/SIR-3032i

High Speed

High Capacity

Features RAID-1 dual hard disk drives
for reliable high-speed recording and retrieval.

Ensures reliable recording of data on RAID-1 dual hard disk drives.

Removable hard disk drive 4 times faster and 6 times larger than the SIR-1000 Series recorders.

Removable Hard Disk Drive

You can start a new recording immediately by swapping HDDs when the medium is full. No download time is required. The HDD's fast reading speed enables quick data file creating on a local disk of a PC. HDDs also reduce running costs because they can be used over again.

RAID-1 dual drive

The system uses RAID-1 dual hard disk drives. Each of the drives constantly stores the same data in RAID-1 mode. Even if an unforeseen crash occurs on one drive, the other drive will continue recording your data.

Multi-channel and wide bandwidths

The system can be expanded from 32 to 128 channels by combining measuring units. Bandwidth is still 20kHz even with a 128 channel configuration.

Front loading

Front loading hard disk drives are Hot Swappable. Hard disk drives can be easily replaced without having to shut down the unit's power.

Extended recording time

The 200GB hard disk drive provides 256 hours (10 days) of measurement signal recording time at 32ch/1.25kHz. This is 5.7 times longer than the previous product.

High vibration resistance

Dedicated shock mount adapters (option) improve vibration resistance to 0.5G and enable reliable recording even when the unit is subjected to vibrations.

Large capacity buffer memory

The unit's large capacity buffer memory can hold data when the system cannot write or read in a condition of excessive vibration, and re-writes or re-reads immediately after the vibration amplitude subdues.

New viewer software

Sony's new PCscan V viewer software can easily find data you are looking for and export it to various data formats for post analysis. Time taken for creating a data file on a PC has been substantially reduced.

Measuring units

SIR-3032W/SIR-3032i

SIR-3032W for wide band applications.
SIR-3032i for IEPE/TEDS compatibility.

- Dynamic range has been improved by 6dB for even better recording quality.
- Wide bandwidth. DC to 1.25kHz (min) and DC to 80kHz (max) for SIR-3032W, and DC to 20kHz (max) for SIR-3032i. Sampling frequency is x2.4 of the bandwidth (on 48kHz sampling frequency system).
- A variety of inputs including "unbalanced or differential," "IEPE (amplifier not required) or voltage" and reading "TEDS (Transducer Electronic Data Sheet)" data enables substantially shorter setup time.
- Input ranges in 7 steps from 0.1 to 10V. AC or DC Coupling. Offset: ±100%.
- Signal levels for each channel are displayed with 4-color LEDs, alerting users to input overloads.
- Analog output for all channels 5V Full scale in 100 steps.
- For input monitors, select any 1 channel from each measuring unit.
- Connect two 32 channel units for a 64 channel system or expand your system up to 4 units/128 channels using the expansion board SIF-3004 (option).

SIR-3032W DC to 80kHz max.

SIR-3032i DC to 20kHz max.

SIR-3032W Channel Bandwidths*

Number of channels		32	64	128	Recording time
Recording speed	Data rate (MB/s)	1 measuring unit (kHz)	2 measuring units (kHz)	4 measuring units (kHz)	SIR-3400H (hours)
x4	12	80	40	20	4
x2	6	40	20	10	8
x1	3	20	10	5	16
x1/2	1.5	10	5	2.5	32
x1/4	0.75	5	2.5	1.25	64
x1/8	0.38	2.5	1.25	–	128
x1/16	0.19	1.25	–	–	256

SIR-3032i Channel Bandwidths*

Number of channels		32	64	128	Recording time
Recording speed	Data rate (MB/s)	1 measuring unit (kHz)	2 measuring units (kHz)	4 measuring units (kHz)	SIR-3400H (hours)
x4	12	–	–	20	4
x2	6	–	20	10	8
x1	3	20	10	5	16
x1/2	1.5	10	5	2.5	32
x1/4	0.75	5	2.5	1.25	64
x1/8	0.38	2.5	1.25	–	128
x1/16	0.19	1.25	–	–	256

* The 96ch mode is not available but may be connected. In such case, the bandwidth and recording time are the same as the 128ch mode.
* Mixed configuration of the SIR-3032i and the SIR-3032W is possible. In this case, the SIR-3032W is recognized as SIR-3032i.
* The bandwidths in the table are based on 48kHz sampling frequency system. 32.768kHz sampling frequency series is also available. (Sampling frequency = Bandwidth x 2.56)

System Configuration

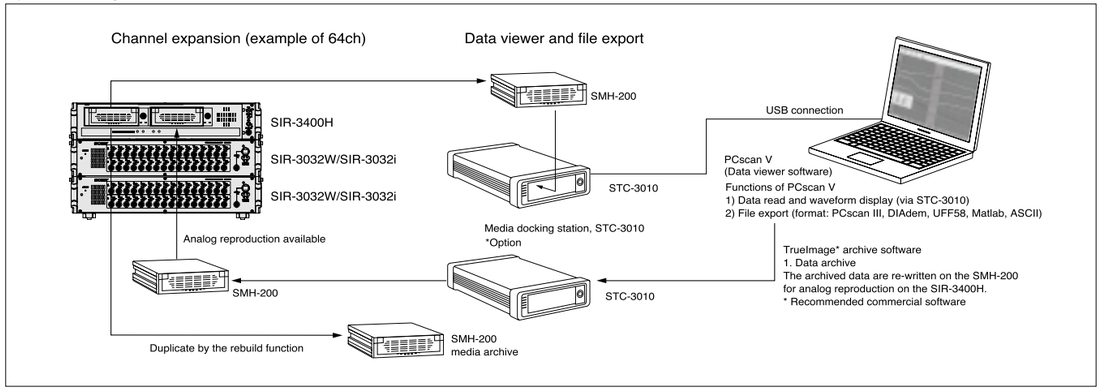

Recording unit
SIR-3100T

Recording unit
SIR-3100T

Measuring unit
SIR-3032i

High Speed

High Stability

Archive on large capacity 80GB tapes.

AIT-2 Turbo tape (80GB)

AIT-2 Turbo

The system uses 80GB(non-compressed) AIT-2 Turbo tapes that achieve twice the recording capacity of AIT-1 at a low price. This means it will require only half of your previous storage space and reduce your media costs (price per GB) to about a quarter of that of the previous system.

Highly reliable archive

Magnetic recording media have been proven to provide stable and long term storage. They are used as highly economical and reliable storage media.

Multi-channel and wide bandwidths

Offers multi-channel and wide bandwidths ranging from 32ch/20kHz to 128ch/5kHz. In addition the system can be upgraded to “double speed” enabling 40kHz recording at 32ch (lower bandwidths also available).

High vibration resistance

With optional shock mount adapters, the system can keep recording data in extreme vibration environments up to 10G.

Large capacity buffer memory

The SIR-3000 Series is equipped with a large capacity buffer memory which performs rewrite or reread procedures to continue stable recording. The unit’s large capacity buffer memory can hold data when the system cannot write or read in a condition of excessive vibration or read/write errors, and re-writes or re-reads immediately after the vibration amplitude subdues.

Dust resistance

Every step has been taken to eliminate air flow into the tape drive mechanism. By optimizing the ventilation path and equipping the system with a dust filter, twice the level of dust resistance of previous products has been achieved.

Measuring unit
SIR-3032i

SIR-3032i IEPE/TEDS compatible

- Dynamic range has been improved by 6dB for even better recording quality.
- Wide bandwidth. DC to 1.25kHz (min) and DC to 20kHz (max) for SIR-3032i.
  Sampling frequency is x2.4 of the bandwidth (on 48kHz sampling frequency system).
- A variety of inputs including “unbalanced or differential,” “IEPE (amplifier not required) or voltage” and reading “TEDS (Transducer Electronic Data Sheet)” data enables substantially shorter setup time.
- Input ranges in 7 steps from 0.1 to 10V. AC or DC Coupling. Offset: ±100%.
- Signal levels for each channel are displayed with 4-color LEDs, alerting users to input overloads.
- Analog output for all channels 5V Full scale in 100 steps.
- For input monitors, select any 1 channel from each measuring unit.
- Connect two 32 channel units for a 64 channel system or expand your system up to 4 units/128 channels using the expansion board SIF-3004 (option).

SIR-3032i DC to 20kHz max.

SIR-3032i Channel Bandwidths*

Number of channels		32	64	128	Recording time
Recording speed	Data rate (MB/s)	1 measuring unit (kHz)	2 measuring units (kHz)	4 measuring units (kHz)	SIR-3100T (hours)
x1	3	20	10	5	6
x1/2	1.5	10	5	2.5	12
x1/4	0.75	5	2.5	1.25	24
x1/8	0.38	2.5	1.25	–	48
x1/16	0.19	1.25	–	–	96

* The 96ch mode is not available but may be connected. In such case, the bandwidth and recording time are the same as the 128ch mode.
* Double speed option using SIR-3032W for 40kHz/32ch or 20kHz/64ch is also available. Please contact us for more details.
* The bandwidths in the table are based on 48kHz sampling frequency system. 32.768kHz sampling frequency series is also available. (Sampling frequency = Bandwidth x 2.56).

Compatible with SIR-1000 Series for Reproduction

	Number of channels	Reproduction on SIR-3100T
SIR-1000 i	16,32	○
	64,128	
SIR-1000W	4,8,16	

* CIRCLE = YES, BLANK = NO
* Tapes recorded on the SIR-3100T cannot be reproduced on the SIR-1000 Series.
  The SIR-1000 Series has no INDEX. The INDEX display and search are not available.

System Configuration

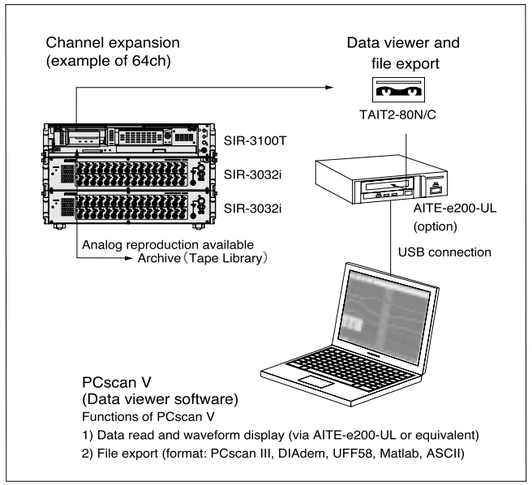

AIT-2 Turbo

- Highly reliable and durable mechanism

The tape drive employs a helical scan system to minimize the load on the tape. Bearing-loaded guide pins and an electrical tension sensor thoroughly eliminate the drive mechanism's effects on the tape. This ensures unprecedented reliability and durability.

- Greatly reduced head clogging

Head clogging is greatly reduced through the use of AME (Advanced Metal Evaporated) tapes which have dry and binder-free surfaces, and periodical operation of a built-in head cleaner.

- Newly designed drive with enhanced protection against dust

The intake cooling fan has been removed. Instead a fan-cooled heat sink has been installed. The combination of this heat sink and the dust prevention bezel, eliminates dust penetration into the tape drive.

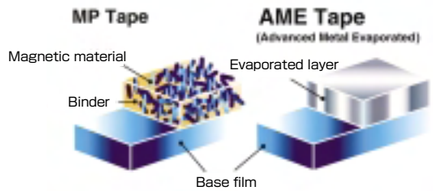

Function

The SIR-3000 Series' Basic Functions

A lot of user friendly and useful functions to make your measurements easier!

Functions

- Multi-speed: You can choose from 7 record and reproduction speeds (SIR-3400H). You can choose the optimum bandwidth and change the time axis by reproducing the data at different speeds.
- Sampling/bandwidth (same across all channels): After selecting either the 48kHz or 32kHz sampling frequency system to suit your analysis software, this is automatically configured according to recording speed.
- Color LCD: The large color LCD makes it easy to select the various menu options.
- Monitor: The monitor offers a 16-channel bar meter display as well as information on Speed, ID, Index, recording status in order to allow users to grasp these data at a glance.
- TOC View: You can see recording contents at a glance.
- Search: The system now offers indexing functions for ID, INDEX, MARK1, MARK2, ADDRESS, FF, REW, X16 manual search, NEXT ID and Previous ID for even more detailed searching.
- Recording: Reliable recording is ensured through functions such as calibration, self checks, various test signals, and error checks performed by continuous operation monitoring.
- Save set-ups: You can save and retrieve your set-ups using the set-up saving function on the unit, media retrieval or memory card (three set-ups).
- Voice annotation: An additional channel is provided for voice memo. Comments can be recorded during recording.
- Monitor output: You can select 1 channel from each of the measuring units (up to 128 channels on four units).
- Sub-channel: AUX-1:IRIG-B time code channel, AUX-2:Digital channel (rotating pulse/bit stream applications), and voice annotation channel (microphone input and speaker reproduction) are available as inputs as well as outputs in addition to data channels.
- Trigger input: The unit provides trigger-based control over recording start and stop. Also available are pre-/post- plus single/multi-triggers.
- Remote set up and controls: The system can be set up and controlled from a distant location via Ethernet.
- Multiple power sources: The system is powered by AC and DC (with AC as the priority power source). In case of momentary failure of these power sources, UPS takes over to keep the system running. Power standby switch is on the front panel for easy power on/off when rack mounted.

- Intuitively controlable easy GUI

- Remote control software offers the same functions as on the actual unit (Can be controlled from a PC networked by Ethernet)

Rear Panel

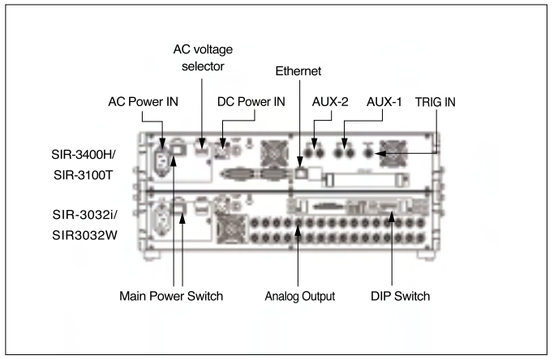

Channel Expansion

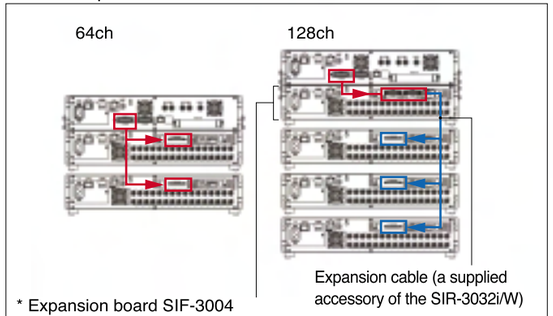

* Expansion board SIF-3004 (option) is required for connecting three or more SIR-3032i/W's.

Software

Software/hardware integration

Quick search over the recorded data. Just select and export only data of interest for post analysis. No need to create a file of the entire recording.

Data viewer software

PCscan V

"PCscan V" is Sony's unique viewer software developed specially for the SIR-3000 Series. This software is capable of reading data recorded on an AIT-2 Turbo cartridge or SMH-200, connected via an AIT tape streamer or Media Docking Station respectively, to plot waveforms on your PC and save them as data files. You can select and export the necessary part of the data to a format suitable for your analysis software. You no longer have to download all of the data. "PCscan V" enhances efficiency in a task from data reading and exporting to a data file for analysis.

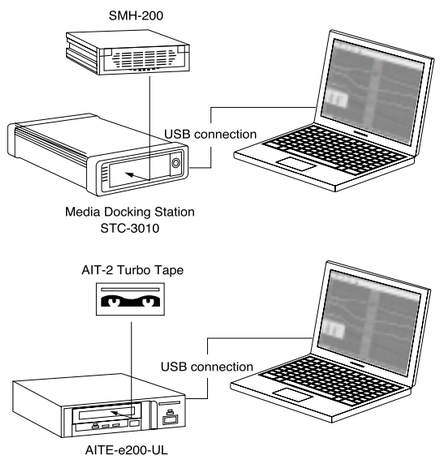

- Diverse data file formats

CSV	ASCII
MATLAB	DIAdem
UDF58	PCscan III

PCscan III comes with the PCscan V as freeware

- PC Specifications

Computer	IBM/PC-AT or a compatible machine
Operating system (OS)	Windows 2000 Professional, Windows XP Professional/Home Edition (Japanese or English version)
CPU and memory	Pentium 4 2.4GHz min. (Intel Pentium M 1.8GHz min. when using a notebook computer); 768MB min. is recommended
Hard disc drive	Windows compatible hard disc drive; free space for software installation: 50MB min.
CD-ROM drive	For installing the software
Display graphic	1024 x 768 pixels min. (1400 x 1050 min. is recommended)
Input device	Windows compatible mouse and keyboard

PCscan V automatically scans all the data in the SIR-3000 and displays them in hierarchical order.

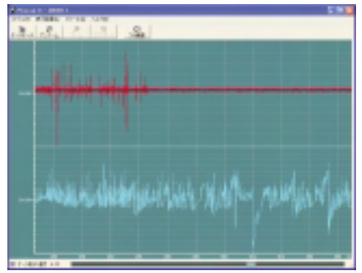

By clicking on the ID, you can instantly have an overview, even if the file size is huge.

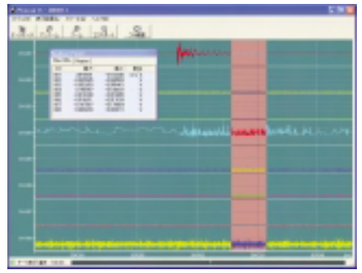

You can zoom in while the data is still in the process of expanding. You do not have to wait until the entire data is expanded and plotted.

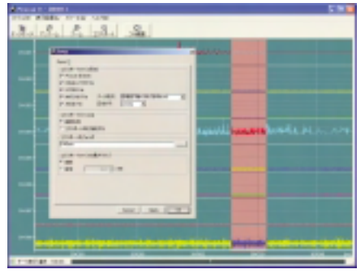

After finding the target data, simply export the data to a file in your desired format.

Accessories

Optional Accessories

For SIR-3400H | For SIR-3100T

Shock mount adapter SSM-3010

This adapter provides shock resistance of up to 10G when used on SIR-3100T (0.5G when used on the SIR-3400H).

For SIR-3400H | For SIR-3100T

Rack mount adapter SRT-3010

For 19-inch rack mount (2U).

For SIR-3400H | For SIR-3100T

Expansion board SIF-3004

For channel expansion over 64ch (connecting 3 or 4 measuring units)

For SIR-3400H | For SIR-3100T

PCscan V data viewer software SUK-3000

Offers quick data searching and export to a data file on a PC's local disk.

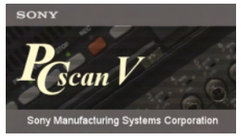

For SIR-3400H

200GB removable HDD SMH-200

A power interlinked attach/remove key offers hot-swap functionality.
Dimensions: 118 (W) x 36 (H) x 186 (D) mm, excluding protrusions.
Mass: Approximately 1kg.

For SIR-3400H

Media Docking Station STC-3010

Interfaces SMH data cartridge and a PC via USB2.
Dimensions: 191 (W) x 60 (H) x 305 (D) mm, excluding protrusions.
Mass: Approximately 3kg.
(Without SMH cartridge)

For SIR-3100T

AIT-2 Turbo tape (80GB) TAIT2-80N

Diamond-like coating dramatically reduces tape scratches.
Dimensions: 95 (W) x 62.5 (H) x 15 (D) mm
Mass: Approximately 0.074kg.

For SIR-3100T

AIT-2 Turbo drive (external, USB) AITE-e200-UL or equivalent

External tape drive with easy USB connection for data reading by a PC.
Dimensions: 198 (W) x 64.5 (H) x 246 (D) mm, excluding protrusions.
Mass: Approximately 2.4kg.

Specification

Recording Unit

Model name		SIR-3400H	SIR-3100T
Recording media		SMH cartridge x 2 (removable HDD)	AIT cartridge (AIT-2 Turbo tape)
Recording/reproduction speed		x4,x2(Option),x1,x1/2,x1/4,x1/8,x1/16,(x4=12MB/s)	x4,x2(Option),x1,x1/2,x1/4,x1/8,x1/16,(x1=3MB/s)
Connection with measuring unit		SIR-3032i/w (up to 4 units optional SIF-3004 Expansion board necessary for connecting 3 or 4 units)	
Local control		By panel key switch	
Remote control		100BASE-TX Ethernet	
Voice annotation channel		1ch; input: standard mic jack; output: built-in speaker or mini-jack	
AUX-1 (Digital channel)		1ch; input: TTL; output: TTL; sampling frequency: 384kHz x recording / reproduction speed (1.6MHz @ x 4-speed)	1ch; input: TTL; output: TTL; sampling frequency: 384kHz x recording / reproduction speed (384kHz @ x 1-speed)
AUX-2 (Analog channel)		1ch for IRIG-B time code; input: ±1.0 to 10V, auto range; output: ±1.5V	
Monitor channel		1ch, selectable from all the connected channels	
Operating environments	Temperature	0 to 40°C	
	Humidity	20 to 80% RH	
	Air pressure	660 to 1060hPa	
Vibration resistance		4.9m/s² (0.5G), with shock mount adapter SSM-3010	14.7m/s² (1.5G)
Dimensions (W x D x H)		449 x 305 x 88mm	
Mass		Approx. 10.5kg (with 2 SMH-200 systems)	Approx. 10kg
Power supply	AC	90 to 132V (47 to 66Hz/440Hz) / 198 to 250V (47 to 66Hz)	
	DC	11 to 30V	
	Backup battery	Built-in nickel hydride battery	
Power consumption		AC:180VA. DC:13.5~5.0A	AC:180VA. DC:14.5~5.5A
Safety compliance		UL, EN	
EMC compliance		FCC, CE, AS, NZS	
Supplied accessories		Microphone for voice channel (1), AC power cable (1), DC power cable (1), Operation manual (1), SMH-200 (2)	Microphone for voice channel (1), AC power cable (1), DC power cable (1), Operation manual (1), Data cartridge TAIT2-80N (1), Cleaning tape SDx1-CL (1), Air filter (2)

Measuring Unit

Model name		SIR-3032i	SIR-3032W
Number of channels		32ch	
Quantization		16bit	
Sampling frequency (bandwidth)		Max. 48kHz (20kHz), Max. 32.768kHz (12.8kHz)	Max. 192kHz (80kHz), Max. 131.072kHz (51.2kHz)
Input	Type	Direct voltage (unbalance / differential switchable) / IEPE sensor (TEDS compatible)	
	Impedance	100kΩ	
	Connector	BNC	
	Direct voltage: Input range	±0.1 to 10V (1-2-5 steps)	
	Direct voltage: Coupling	AC/DC	
	Direct voltage: DC offset	±100% (1% steps)	
	IEPE sensor: Input range	±0.1 to 10V (1-2-5 steps)	
	IEPE sensor: Coupling	AC	
	IEPE sensor: Sensor power	4mA (constant current), 24V	
Output	Level	±5.0V (0.1V steps)	
	Impedance	50Ω	
	Connector	BNC	
Frequency response (0dB@200Hz)		±0.5dB	±0.5dB (20kHz bandwidth or less); ±1.0dB (40, 80kHz bandwidth)
THD		-74dB or less	
Dynamic range (±1 to 10V range)		86dB or more	86dB or more (20kHz bandwidth or less), 80dB or more (40, 80kHz bandwidth)
Interchannel phase difference (within one unit)		1°or less	1°or less (20kHz bandwidth or less), 3°or less (40, 80kHz bandwidth)
DC linearity		±0.1% or less	
Drift		±0.1% or less on each recording / reproduction block (30 minutes after power on)	
Monitor channel		1ch, selectable from 32ch of the same measuring unit	
Operating environment	Temperature	0 to 40°C	
	Humidity	20 to 80% RH	
	Air pressure	660 to 1060hPa	
Vibration resistance		14.7m/s² (1.5G)	
Dimensions (W x D x H)		449 x 305 x 88mm	
Mass		Approx. 7.5kg	
Power supply	AC	90 to 132V (47 to 66Hz/440Hz) / 198 to 250V (47 to 66Hz)	
	DC	11 to 30V	
	Backup battery	Built-in nickel hydride battery	
Power consumption		AC:215A, DC:15.0~5.5A	
Safety compliance		UL, EN	
EMC compliance		FCC. CE. AS. NZS	
Supplied accessories		AC power cable (1), DC power cable (1), Expansion cable (1), Operation manual (1), Binding bracket and screws for recording and measuring unit (1 set), L wrench (1)	

Bandwidth/Channel Modes SIR-3032i/SIR-3032W

Recording/ reproduction speed	Recording/ reproduction time (hours)	SIR-3032i 32ch	SIR-3032i 64ch	SIR-3032W 32ch	SIR-3032W 64ch
x4	4	-	-	80kHz	40kHz
x2	8	-	20kHz	40kHz	20kHz
x1	16	20kHz	10kHz	20kHz	10kHz
x1/2	32	10kHz	5kHz	10kHz	5kHz
x1/4	64	5kHz	2.5kHz	5kHz	2.5kHz
x1/8	128	2.5kHz	1.25kHz	2.5kHz	1.25kHz
x1/16	256	1.25kHz	-	1.25kHz	-

* Using the SMH cartridge (200G removable HDD)

Reproduction Compatibility of SIR-3100T and SIR-1000 Series

	Number of channels	Reproduction on SIR-3100T
SIR-1000i	16, 32	○
	64, 128	
SIR-1000W	4, 8, 16	

* CIRCLE = YES, BLANK = NO
Notes : (1) Tapes recorded on the SIR-3100T cannot be reproduced on the SIR-1000 series.
(2) The SIR-1000 series has no INDEX. The INDEX display and search are not available.

External views