D01361310H

TEAC

LX-1000

Instructions for Use

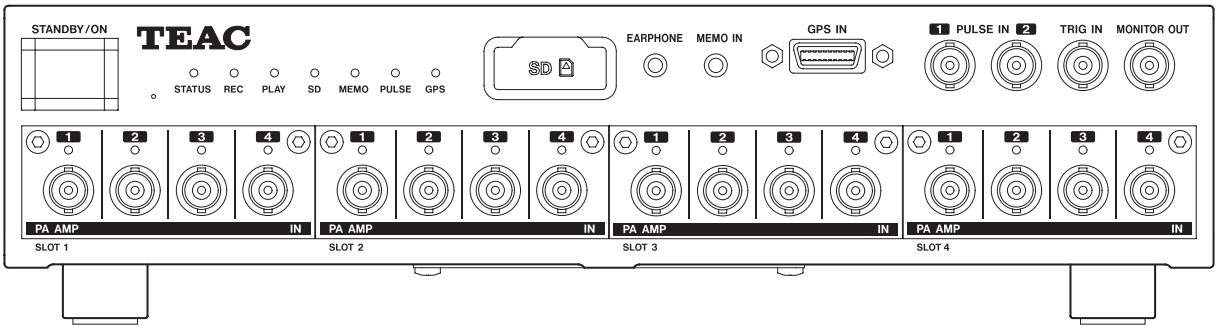

Contents

1. Introduction....3
1-1. Disclaimers....3
1-2. Included accessories....3
1-3. Overview....3
1-4. Features....4
1-5. System configurations....4
1-6. Recording media....5
1-6-1. Media types....5
1-6-2. Media that has been verified to operate with this system....5
1-7. TAFFmat format....5
1-7-1. Type of files....5
1-7-2. File name....5
1-7-3. Media folder structures....6
Folder structure example....6
1-7-4. Data file....7
1-7-4-1. Converting data to physical quantities....7
1-7-5. Header file....7
Example of header file....7
2. IMPORTANT SAFETY INSTRUCTIONS....10
Disposing of this product....11
3. Connections....12
3-1. AC adapter connection....12
3-1-1. 16-channel and 32-channel models....12
3-1-2. 48-channel and 64-channel models....12
3-2. Supplying DC power to the main unit....13
3-3. Installing amplifier modules....13
3-4. TEDS....14
3-5. Computer connection example....14
3-6. Sensor and oscilloscope connection example....15
4. Names and functions of parts....16
4-1. Front....16
4-1-1. Indicators....17
4-2. Back....18
4-3. Side....19
5. Connector specifications....20
5-1. GPS IN....20
Function....20
Connected type....20
Pin assignments....20
5-2. PULSE IN....20
Function....20
Input format....20
Connected type....20
5-3. External trigger signal input (TRIG IN)....21
Function....21
Input circuit format....21
Input format....21
Connected type....21
Connection examples....21
5-4. DIGITAL CONTROL input/output....21
Function....21
Contact input....21
Input format....21
Status output....21
Output format....21
Connected type....21
Pin assignments....22
5-5. DC IN power input....22
Function....22
Connector....22
Pin assignments....22
6. Basic operation....23
6-1. Handling SD cards....23
6-1-1. Handling SD cards....23
6-1-2. Insertion and removal....23
Inserting SD cards....23
Removing SD cards....23
SD card write-protection switches....23
6-2. Turning the power on....23
6-3. Putting the system into standby....23
6-4. Initializing....23
7. Synchronization function....24
7-1. Connections....24
7-2. Making settings....24
7-3. Turning the power on....24
8. Specifications....25
8-1. Main unit (LX-1000)....25
Recording media....25
Sampling frequencies and bandwidths....25
Number of channels that can be recorded simultaneously (when not using CAN recording)....25
Recording time (when not using CAN recording)....26
Voice memo input and output....27
Internal clock....27
External interfaces....27
8-2. General....28
8-3. Included accessories....28
8-4. Pulse input....29
8-5. Synchronized recording....29
8-6. Input/output amplifier modules....30
AR-LXPA1000 analog input amplifier....30
AR-LXST1000 strain input amplifier....30
AR-LXAO1000 analog output amplifier....31
AR-LXCAN1000 CAN module....31
8-7. Options....32
9. Exterior drawings....33
10. Troubleshooting....35
Built-in battery....35
11. Warranty explanation....36

Thank you for purchasing the LX-1000.
Please read this document in its entirety before using the product to get the best performance and ensure safe and proper operation.

1-1. Disclaimers

Information is given about products in this manual only for the purpose of example and does not indicate any guarantees against infringements of third-party intellectual property rights and other rights related to them. TEAC Corporation will bear no responsibility for infringements on third-party intellectual property rights or their occurrence because of the use of these products.

SDXC Logo is a trademark of SD-3C, LLC.

TEAC and TAFFmat are trademarks of TEAC CORPORATION, registered in the U.S. and other countries.

Other company names, product names and logos are the trademarks or registered trademarks of their respective owners.

1-2. Included accessories

If anything is missing or damaged, contact us. (For contact information, see the last page.)

For a list of included accessories, see "8-3. Included accessories" on page 28.

The AC adapters and AC power cords included with this product are designed for use with these units. Do not use them with other equipment.

1-3. Overview

Recording with wide bandwidths, multi channels and long durations is becoming increasingly important for measurements in the fields of space exploration, aircraft development, power generation and railways.
The LX-1000 series fulfills these needs.
These systems use SDHC and SDXC cards as recording media and can record 16-bit/16-channel data for frequency bandwidths up to DC 40 kHz.
Up to 64 channels can be provided in 4-channel units. Furthermore, by synchronizing 4 units, up to 256 channels can be recorded simultaneously.
The quantization bit depth can be set to either 16-bit or 24-bit, which allows measurements with high dynamic ranges.

1-4. Features

- Wide-band, high-resolution, multichannel recording of 16 channels at 16-bit or 8 channels at 24-bit with frequency bandwidths up to DC 40 kHz
- Wide dynamic range realized using 24-bit analog to digital conversion
- SDHC/SDXC cards, which are easy to obtain, used for recording media
- Recording up to 64 channels is possible by combining one LX-1000 with three AU-LX1000EPIO expansion units
- Recording up to 256 channels is possible by synchronizing four units
- High-speed data transmission with computers is possible using Gigabit Ethernet
- LXK Navi software for settings and waveform display included
- TAFFmat data format used
- Voice memo recording and playback
- Stopping and starting recording and playback is possible using external contact inputs
- Files are saved regularly, preventing data loss due to, for example, unexpected power interruptions
- DC input and IEPE sensor input can be used for analog input
- Signal line interruption detection for each channel when using IEPE sensors
- Reads IEPE sensor TEDS information
- Analog monitoring output is possible during recording and playback
- Detection of analog filter input saturation due to excessive input
- Fanless operation enables clear sound and vibration measurement (in systems with up to 8 amplifier modules)
  A cooling fan is necessary if even one AR-LXST1000 is installed.

1-5. System configurations

This system is comprised of a main unit (LX-1000) and one or more expansion units (AU-LX1000EPIO).

Main unit (LX-1000)

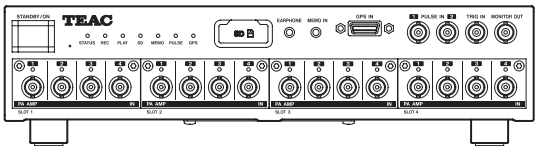

Expansion unit (AU-LX1000EPIO)

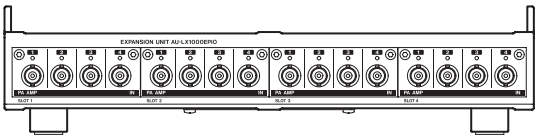

By adding more AU-LX1000EPIO expansion units, you can increase the number of input and output channels. We offer products with 1, 2 and 3 AU-LX1000EPIO expansion units.

32-channel model

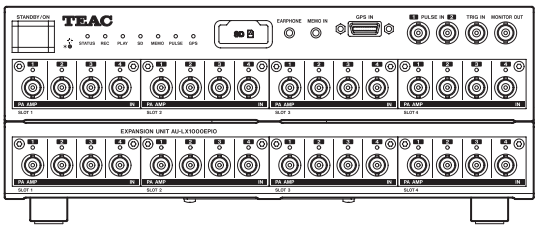

48-channel model

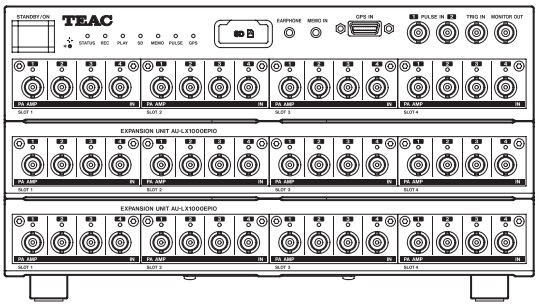

64-channel model

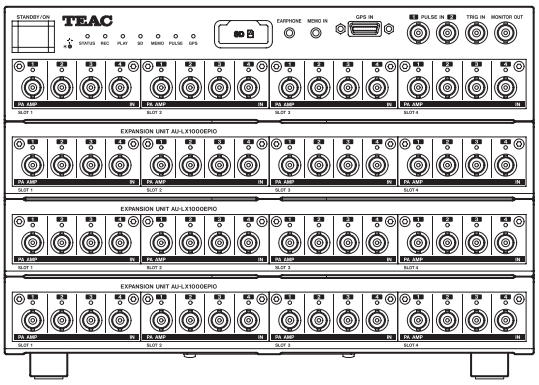

- When multiple AU-LX1000EPIO expansion units are connected, channel numbering starts with channel 1 at the top left and ends with the last channel (32, 48 or 64) at the bottom right.

1-6. Recording media

Open the SD card slot cover of the LX-1000 unit to access the SD card slot.

1-6-1. Media types

Compatible media

SDHC/SDXC cards

Recording capacity

8 GB – 128 GB

Recommended speed class

Class 10

1-6-2. Media that has been verified to operate with this system

This system uses SDHC and SDXC cards for recording and playback.
We provide a list of SDHC and SDXC cards that we have verified for operation with this system on our Information Products Division data recorders website.

https://datarecorder.jp/en/

You can also contact us. (For contact information, see the last page.)

- In this manual, SDHC/SDXC cards are referred to as "SD cards".
- Prepare media for use only with the LX-1000.
- To ensure stable recording, try to keep the total quantity of recorded data to 1000 or less. Moreover, before recording, confirm that the recording medium has enough open space.
- Do not use a computer to delete, move or otherwise alter data recorded on an SD card. Doing so could cause the LX-1000 to become unable to properly record or play data.

1-7. TAFFmat format

1-7-1. Type of files

The LX-1000 makes a binary-format data file and ASCII-format header file each time recording stops or pauses.

Data file:	Contains data converted from analog to digital, etc. (binary format with "DAT" file extension)
Header file:	Contains recording conditions and other information Text (ASCII) format with "HDR" file extension
Voice memo file*:	Contains voice memo data WAV format with "WAV" file extension
GPS file*:	Contains GPS data "GPS" file extension
CAN file*:	Contains CAN data "CAN" file extension
CAN index file*:	Contains CAN data recording positions, for example "CNX" file extension
Index file:	Contains recording conditions and other information Text (ASCII) format with "HDX" file extension

*Files are created when recorded.

1-7-2. File name

The file name is common to the data file and header file. An ID number is added to the end of the specified file name. When you specify a new file name, the ID number starts from 1. After recording is stopped or paused, the ID number is automatically incremented each time the recording restarts. If a data file with the same name or same ID number already exists when recording, the next ID number is used.
Set the file name on the LXK Navi File Settings Screen or the RECORDING FILE Settings Screen of the remote control unit (optional). For the file name, use up to 29 half-width alphanumeric characters. ID numbers (starting from 001) with the set number of digits are attached to file names.
When recording to an SD card, the number of digits is fixed to 3, and the maximum number of characters is 32. When recording to a computer, the number of digits can be set from 3 to 5, and the maximum number of characters is 32–34.

- If the ID number exceeds the set number of digits, recording will stop.

1-7-3. Media folder structures

Folder type	Name	Details
Master folder	LXDAT	This is created in the root folder. Data is managed inside it. The name is fixed.
Project folders	Characters as set (Example: LX1000-DIR1)	These are created in the master folder. Their names can be set as desired.
Recording folders	Characters as set (Example: LX1000_)	These are created in project folders. Their names can be set as desired. Each time recording starts, a folder is created with a suffix added automatically (3 digits on SD cards and 3-5 digits on computers).
Recording data	Same as recording folder	When a recording is divided at 4 GB, a - followed by a three-digit suffix will be added to the name.

Folder structure example

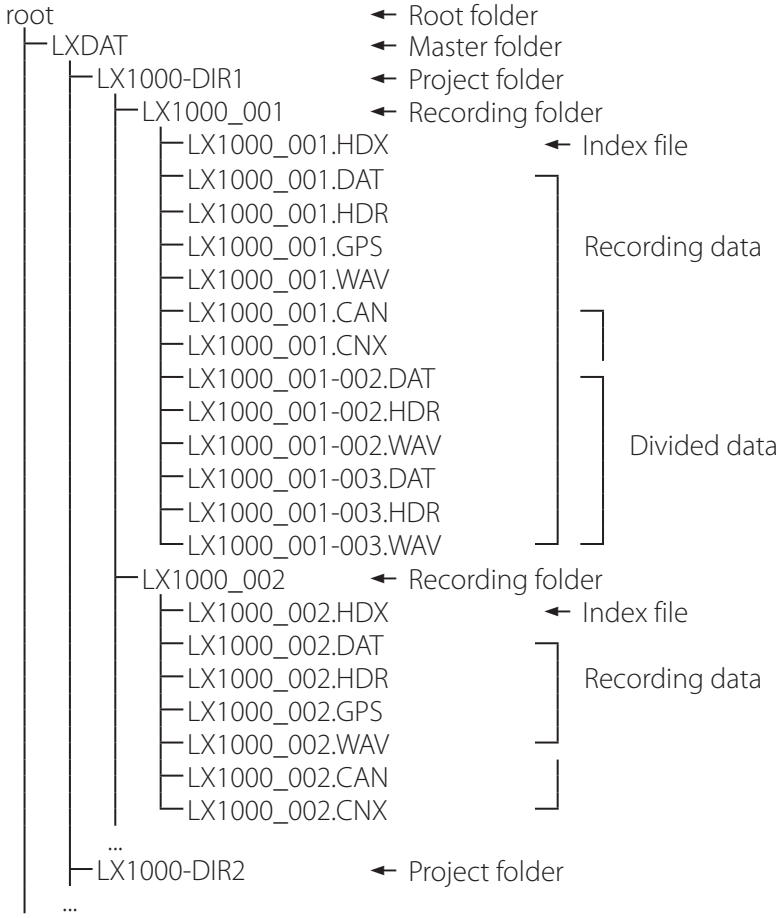

When saving recording data on a computer, the end of the full path of the folder the data is saved in will be the selected "Base folder" followed by the "Folder".

1-7-4. Data file

16-bit data converted from analog to digital is recorded as 2-byte integer values from -32768 to +32767 while 24-bit converted data is recorded as 4-byte integer values from -8388608 to +8388607. Negative numbers are shown using two's-complement notation.
The byte order is from the lowest to the highest (Intel format).
The data order is from the first sampling channel to the second sampling channel and so on until the last sampling channel. This order is called the INTERLACED format, and the format name is recorded in STORAGE_MODE in the header file.
The structure of a data file is as follows. In this document, a collection of data as shown in the example is called a "scan". A data file is made of repeated scans.

Example of data for one scan recorded at 6kHz sampling frequency

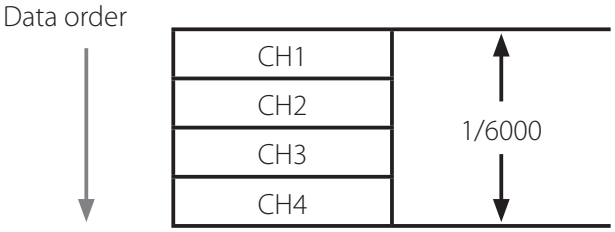

1-7-4-1. Converting data to physical quantities

16-bit data converted from analog to digital is recorded as integer values from -32768 to +32767 and the value would be ±25000 when the input is ±100% in the input range settings. 24-bit converted data is recorded as integer values from -8388608 to +8388607 and the value would be ±6400000 when the input is ±100% in the input range settings. The input value is obtained from the following formula:

Input value = (A/D conversion value of the data file) × SLOPE + Y_OFFSET

● See "Explanations of header file" on page 8 for information about SLOPE and Y_OFFSET.

1-7-5. Header file

Header files are ASCII-format text files containing information such as recording conditions.
In a header file, each recording-condition entry is written on 1 line, with parameters separated by a comma (,). An example of a header file is shown as follows.

Example of header file

DATASET LX1K_001
VERSION 1
SERIES CH1_PA AMP CH 1,CH2_PA AMP CH 2,CH3_PA AMP CH 3,CH4_PA AMP CH 4
DATE 02-27-2019
TIME 14:05:00.00
RATE 48000
VERT_UNITS V,V,V,V
HORZ_UNITS Sec
COMMENT LX-1000
NUM_SERIES 4
STORAGE_MODE INTERLACED
FILE_TYPE LONG
SLOPE 1.562600e-07,1.562600e-07,1.562600e-07,1.562600e-07
X_OFFSET 0.0
Y_OFFSET 0.000000e+000,0.000000e+000,0.000000e+000,0.000000e+000
NUM_SAMPS 1440000

Continued on the next page ➡

DATA
DEVICE LX-1000
SLOT1 PA_AMP,MAXCH=4,REV=0
SLOT2 AO_AMP,MAXCH=4,REV=0
CH1_1 PA AMP CH 1,RANGE=1V,COUPLING=DC,IEPE=OFF,WEIGHTING=FLAT,HPF=OFF
CH2_2 PA AMP CH 2,RANGE=1V,COUPLING=DC,IEPE=OFF,WEIGHTING=FLAT,HPF=OFF
CH3_3 PA AMP CH 3,RANGE=1V,COUPLING=DC,IEPE=OFF,WEIGHTING=FLAT,HPF=OFF
CH4_4 PA AMP CH 4,RANGE=1V,COUPLING=DC,IEPE=OFF,WEIGHTING=FLAT,HPF=OFF
CH5_5 AO AMP CH 5,RANGE=1.0V,OUTPUTCH=1
CH6_6 AO AMP CH 6,RANGE=1.0V,OUTPUTCH=2
CH7_7 AO AMP CH 7,RANGE=1.0V,OUTPUTCH=3
CH8_8 AO AMP CH 8,RANGE=1.0V,OUTPUTCH=4
REC_MODE SD
END_TIME 02-27-2019 14:05:30
START_TRIGGER COMMAND
STOP_CONDITION COMMAND
LX-1000_VERSION MAIN_FIRM:V1.00, MAIN_FPGA:V1.00, AMP_FIRM1:V1.00, AMP_FPGA1:V1.00, AMP_FIRM2:V1.00, AMP_FPGA2:V1.00, 000000000000

Explanations of header file

DATASET	File name
VERSION	1 (This is a fixed value.)
SERIES	Name of each channel
DATE	Date when recording started (month-day-year)
TIME	Time when recording started (hour: minute: second)
RATE	Sampling frequency (Unit: Hz)
VERT_UNITS	Physical units of each channel
HORZ_UNITS	Time axis units (Sec: This is a fixed value)
COMMENT	Comment input on the file settings screen
NUM_SERIES	Number of recording channels
STORAGE_MODE	Data order. Fixed as INTERLACED because this is the scan order.
FILE_TYPE	In 16 bits A/D, INTEGER (1data, 2-byte integers) In 24 bits A/D, LONG (1data, 4-byte integers)
SLOPE	Coefficient used when converting data to physical units
X_OFFSET	Location of the first data on the time axis; normally 0 The setting value (number of seconds to three decimal places) is written in minus for the pre-trigger time. Even if you set the number of scans for Pre-trigger, this will be in seconds.
Y_OFFSET	Offset used for converting data to physical units
NUM_SAMPS	Number of data items recorded per channel
DATA	The data that follows this entry is specific to this model, and it might differ from the formats of other models.
DEVICE	LX-1000
SLOTn	Amplifier name and number of channels installed in SLOT n
CH1_	The following information is written after the underscore: channel names and amplifier settings (input range, coupling, sensor current, weighting filter, HPF setting) for PA amplifiers, and output ranges and output channel settings for AO amplifiers
REC_MODE	Recording destination device (SD, PC, SD+PC)
END_TIME	Recording end time

START_TRIGGER	Recording start conditions	COMMAND: Command DATE: Start time setting EXT: External trigger TIME_OUT: Timeout SYNC: Synchronized recording PRE: Added for a pre-trigger
STOP_CONDITION	Recording stop conditions	COMMAND: Command LEVEL: Level trigger TIMER: Specified recording time EXT: External trigger MEDIA FULL: When media becomes full SYNC: Synchronized recording POST: Added for a post-trigger
START_PRE_COUNT	Number of scans recorded by a pre-trigger	
STOP_POST_COUNT	Number of scans recorded by a post-trigger	
MARK	Number of scans at the instant an event mark was attached.	
VOICE_MEMO	The bits per sample and data size (bytes) for voice memos	
LX-1000_VERSION	LX-1000 main firmware and FPGA versions and amplifier unit firmware and FPGA versions	
DIVIDE	File division number (added when files are divided at 4GB intervals)	
SYNC	Synchronized recording setting	

2. IMPORTANT SAFETY INSTRUCTIONS

Model for USA

Supplier's Declaration of Conformity

Model number: LX-1000
Trade name: TEAC
Responsible party: TEAC AMERICA,INC.
Address: 10410 Pioneer Blvd. Unit #1, Santa Fe Springs, California 90670, U.S.A.
Telephone number: 1-323-726-0303
This device complies with Part 15 of the FCC Rules. Operation is subject to the following two conditions: (1) this device may not cause harmful interference, and (2) this device must accept any interference received, including interference that may cause undesired operation.

Information

This equipment has been tested and found to comply with the limits for a Class A digital device, pursuant to part 15 of the FCC Rules. These limits are designed to provide reasonable protection against harmful interference when the equipment is operated in a commercial environment. This equipment generates, uses, and can radiate radio frequency energy and, if not installed and used in accordance with the instruction manual, may cause harmful interference to radio communications. Operation of this equipment in a residential area is likely to cause harmful interference in which case the user will be required to correct the interference at his own expense.

CAUTION

Changes or modifications not expressly approved by the party responsible for compliance could void the user's authority to operate the equipment.

Model for Canada

Innovation, Science and Economic Development Canada's Compliance Statement:
This Class A digital apparatus complies with Canadian ICES-003.
Cet appareil numérique de la classe A est conforme à la norme NMB-003 du Canada.

Model for Europe

DECLARATION OF CONFORMITY

This product complies with the European Directives request, and the other Commission Regulations.

DECLARACIÓN DE CONFORMIDAD

Este producto cumple con las exigencias de las directivas europeas y con los reglamentos de la Comisión Europea.

DÉCLARATION DE CONFORMITÉ

Ce produit est conforme aux directives européennes et aux autres réglementations de la Commission européenne.

KONFORMITÄTSERKLÄRUNG

Dieses Produkt entspricht den Anforderungen europäischer Richtlinien sowie anderen Verordnungen der Kommission.

Model for UK

This product complies with the applicable UK regulations.

WARNING

This is a Class A product. In a domestic environment, this product may cause radio interference in which case the user may be required to take adequate measures.

ATENCIÓN

Este es un producto de clase A. En un entorno no profesional, este aparato puede producir interferencias de radio, en cuyo caso el usuario será el responsable de tomar las medidas necesarias para solucionarlo.

AVERTISSEMENT

Il s'agit d'un produit de Classe A. Dans un environnement domestique, cet appareil peut provoquer des interférences radio, dans ce cas l'utilisateur peut être amené à prendre des mesures appropriées.

Warnung

Dies ist eine Einrichtung, welche die Funk-Entstörung nach Klasse A besitzt. Diese Einrichtung kann im Wohnbereich Funkstörungen versursachen; in diesem Fall kann vom Betrieber verlang werden, angemessene Maßnahmen durchzuführen und dafür aufzukommen.

DISCLAIMER

TEAC disclaims all warranty, either expressed or implied, with respect to this product and the accompanying written materials. In no event shall TEAC be liable for any damages whatsoever (including, without limitation, damages for loss of business profits, business interruption, loss of business information or other loss) arising out of the use of or inability to use this product.

Disposing of this product

When disposing of this product, including accessories, consumable parts and related items, follow the regulations of the local, regional and national governments.

For European Customers

Disposal of electrical and electronic equipment and batteries and/or accumulators

a) All electrical/electronic equipment and waste batteries/accumulators should be disposed of separately from the municipal waste stream via collection facilities designated by the government or local authorities.

b) By disposing of electrical/electronic equipment and waste batteries/accumulators correctly, you will help save valuable resources and prevent any potential negative effects on human health and the environment.

c) Improper disposal of waste electrical/electronic equipment and batteries/accumulators can have serious effects on the environment and human health because of the presence of hazardous substances in the equipment.

d) The Waste Electrical and Electronic Equipment (WEEE) symbols, which show wheeled bins that have been crossed out, indicate that electrical/electronic equipment and batteries/accumulators must be collected and disposed of separately from household waste.

If a battery or accumulator contains more than the specified values of lead (Pb), mercury (Hg), and/or cadmium (Cd) as defined in the Battery Directive (2006/66/EC, 2013/56/EU), then the chemical symbols for those elements will be indicated beneath the WEEE symbol.

e) Return and collection systems are available to end users. For more detailed information about the disposal of old electrical/electronic equipment and waste batteries/accumulators, please contact your city office, waste disposal service or the shop where you purchased the equipment.

3. Connections

3-1. AC adapter connection

When using the main unit (LX-1000) alone or with a single expansion unit (AU-LX1000EPIO), they can be powered with a single AC adapter. When using two or three expansion units, two AC adapters are necessary.
Connect AC adapters as shown in the following illustrations.

ATTENTION

- Do not supply power to AC adapters until after securely connecting all connection cables between units.
- Before connecting or disconnecting connection cables, turn off the power to the AC adapters.
- Place AC adapter bricks away from the main unit (LX-1000) and expansion units (AU-LX1000EPIO).
- When using in Japan, use the included AC cord(s) with PSE mark(s) on the plug(s).
- When using in the North American region, use the included AC cord(s) with CSA mark(s) on the plug(s).

3-1-1. 16-channel and 32-channel models

Connection example

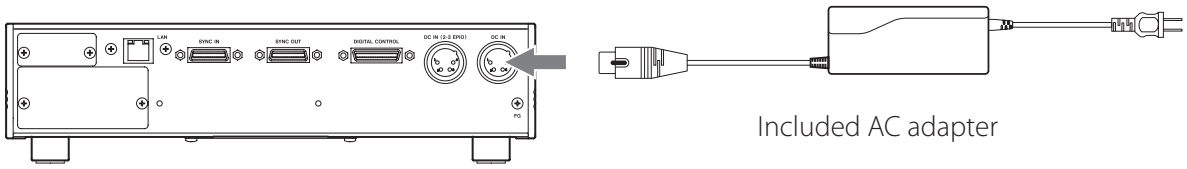

Connect the included AC adapter to the DC IN on the LX-1000.

3-1-2. 48-channel and 64-channel models

Connection example

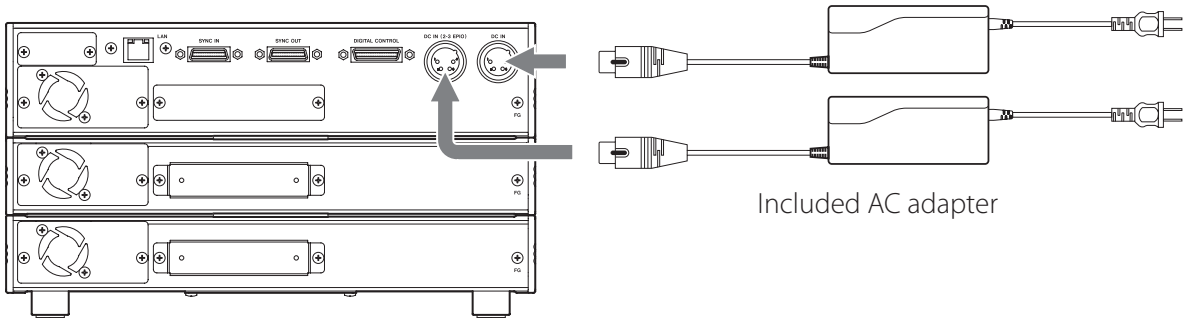

Connect the included AC adapters to the DC IN and DC IN (2-3 EPIO) on the LX-1000.

3-2. Supplying DC power to the main unit

The LX-1000 operates on DC 8–36V power.
To supply power using equipment other than the included AC adapter(s), correctly follow the pin number assignments in "5-5. DC IN power input" on page 22.
Equipment could be damaged if connections are made with incorrect pin numbers or voltage that exceeds the guaranteed voltage operating range is supplied.

⚠ ATTENTION

- The guaranteed DC power supply operating range is DC 8–36 V. Never use a voltage outside this range. Doing so could damage equipment or cause unexpected system shutdowns.
- Do not supply power to DC INs until after securely connecting all connection cables between units.
- Before disconnecting connection cables, turn off the power to the DC INs.

3-3. Installing amplifier modules

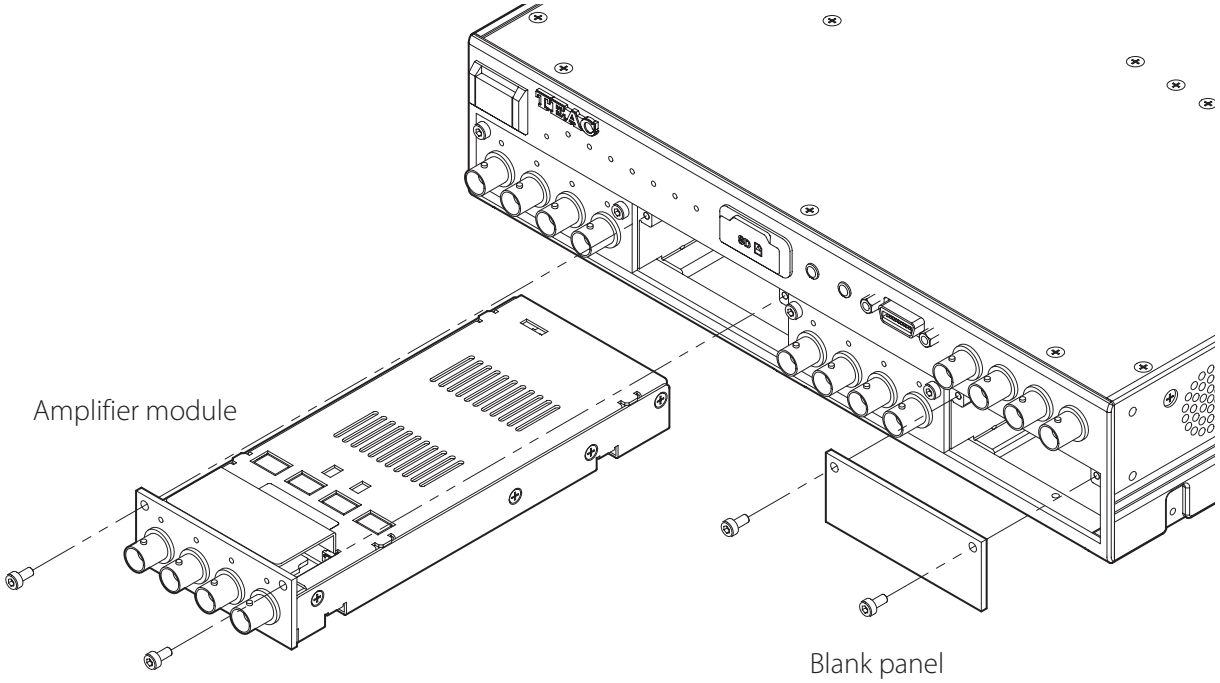

- Amplifier modules can be added to the LX-1000 in single-slot units.
- Always turn off power to the AC adapter and the DC IN before adding or replacing amplifier modules.
- Install amplifier modules starting from slot number 1 in order without leaving any empty slots between modules.
- When installing different types of amplifier modules, install AR-LXPA1000 modules, followed by AR-LXST1000 modules, AR-LXCAN1000, and then AR-LXAO1000 modules in order from the lowest slot number.
- Use the hexagonal socket screws included with the main and expansion units to securely install the amplifier modules.
- Attach blank panels to slots that do not have amplifier modules installed.
- Since CAN modules do not have anything that can be grasped, to remove one from an LX-1000, attach a connector to it with screws. Then, pull that connector to bring the module out.
- A maximum of 4 AR-LXCAN1000 modules can be installed.
- To use an AR-LXCAN1000, an AR-LXPA1000 or AR-LXST1000 must be installed in SLOT 1.

3-4. TEDS

A Transducer Electronic Data Sheet (TEDS) is a standard format defined in IEEE 1451.4 for recording information specific to a measurement sensor that is stored within the sensor itself. By connecting a TEDS sensor with a TEDS-compatible amplifier module, sensor calibration is made unnecessary, reducing the time required for measurement preparations.

- If transducer information is not compliant with the TEDS IEEE standard, correct information cannot be loaded and displayed.
- Supports TEDS Ver. 1.0.

3-5. Computer connection example

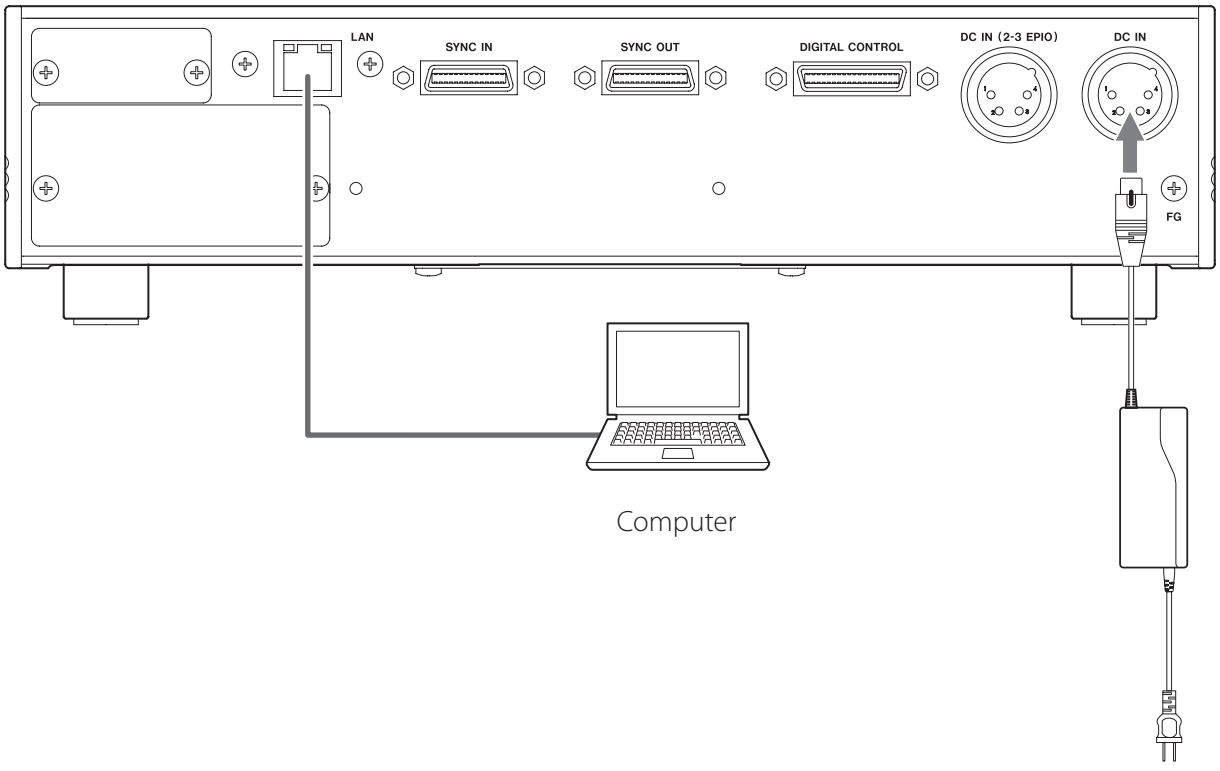

- This unit's LAN connection supports 1000BASE-T Ethernet.
  Use a compatible computer.
- This unit's LAN connection is compatible with Auto MDI/MDI-X. You can use a straight cable even when connecting with a computer directly. Use a category 7 LAN cable.

3-6. Sensor and oscilloscope connection example

In the following example, AR-LXPA1000 analog input amplifiers are installed in SLOT 1, SLOT 2 and SLOT 3 and an AR-LXAO1000 analog output amplifier is installed in SLOT 4 of the LX-1000 main unit.

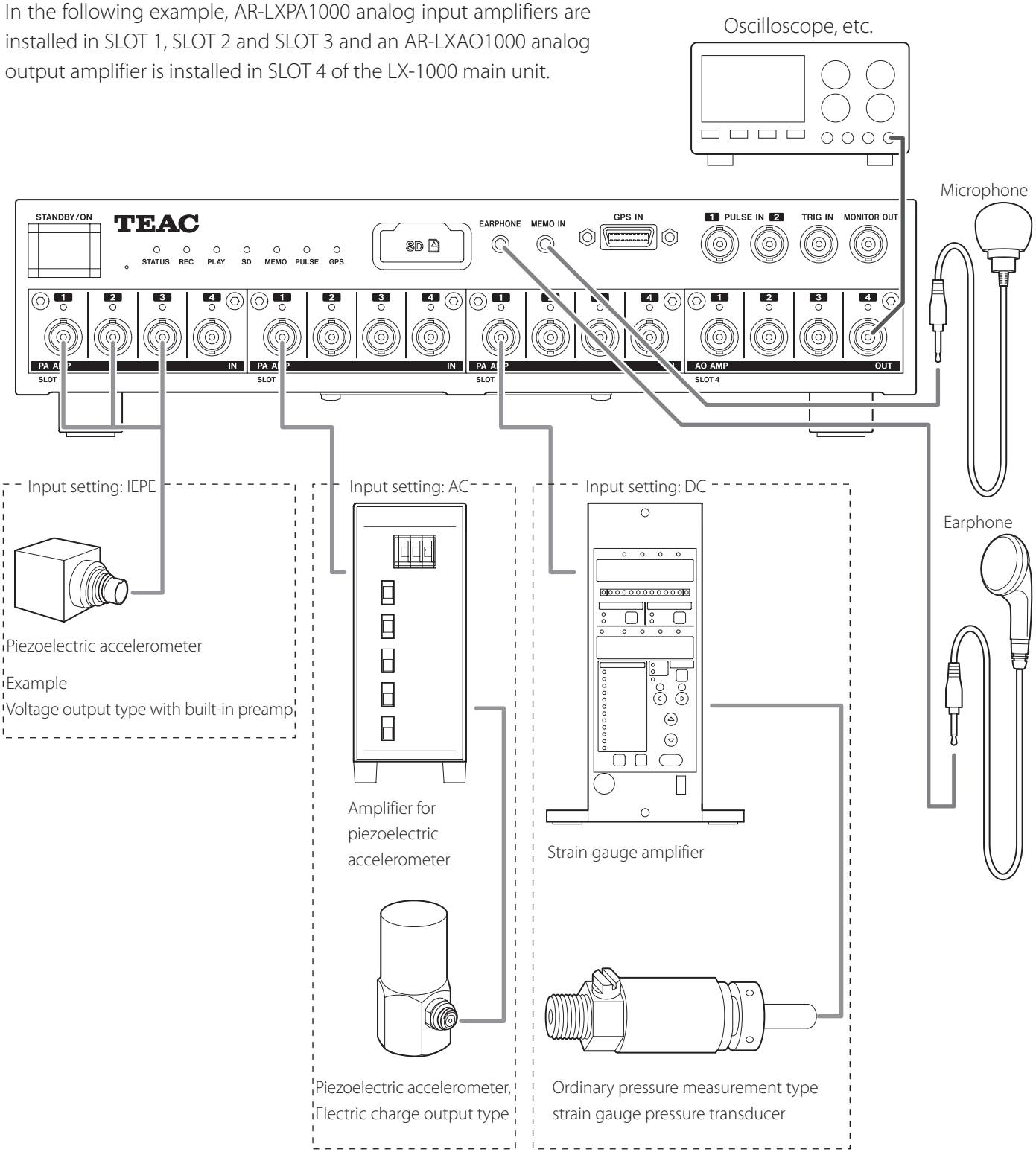

4. Names and functions of parts

4-1. Front

Main unit (LX-1000)

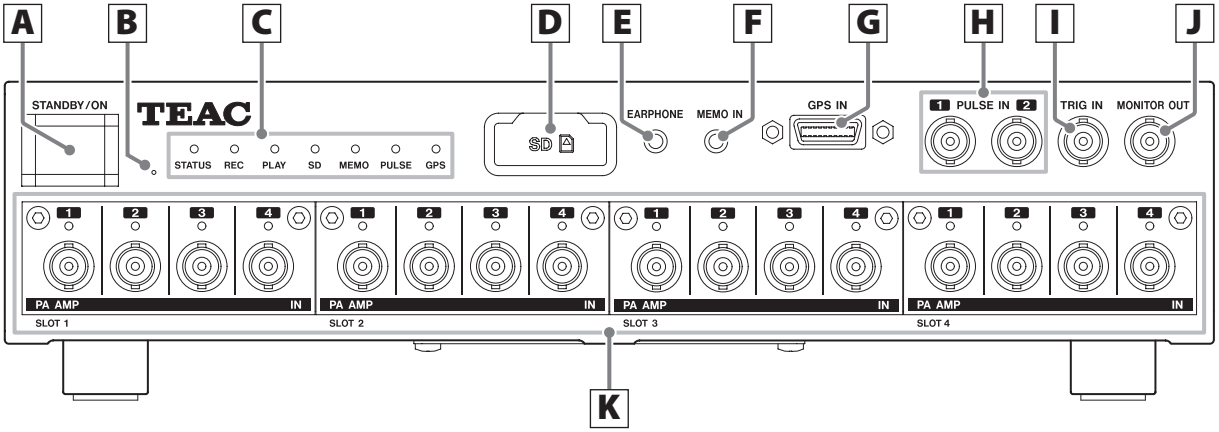

Expansion unit (AU-LX1000EPIO)

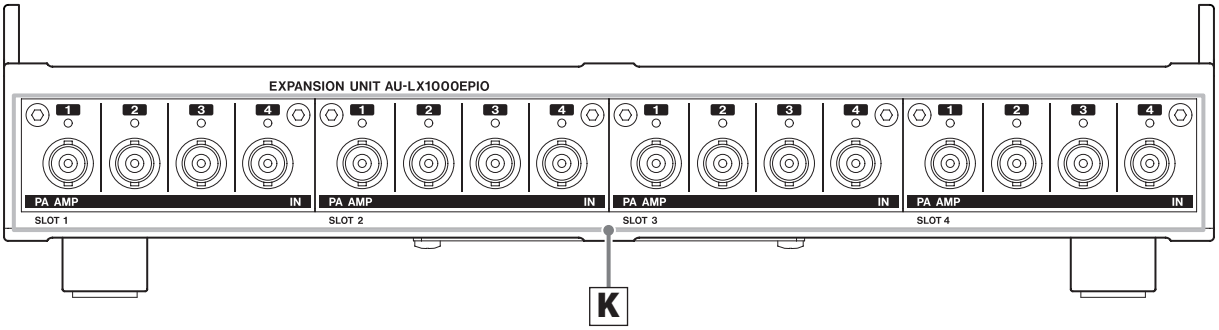

A STANDBY/ON button

Press and hold this button to turn the system on. Press and hold it again to put the system into standby.

The light shows the status as follows.

Lit blue: Stopped
Blinking blue: Starting up
Lit orange: Power supply voltage abnormal
Blinking orange: Entering standby
Unlit: In standby mode

B Initialization switch

Use this to initialize the main unit (page 23).

- Use a long fine pin that fits the hole, such as a large straightened paper clip, to press this switch.

C Indicators

These light to show the current status.

See "4-1-1. Indicators" on page 17 for details.

D SD card slot

Open the SD card slot cover to insert an SD card (page 23).

E EARPHONE jack

Connect an earphone here when playing voice memos.

- When an earphone is connected, sound will not be output from the speaker built into the side of the unit.

F MEMO IN (mic input) jack

Connect the included mic here to record voice memos.

G GPS IN connector

H Pulse input (PULSE IN) connectors

I External trigger signal input (TRIG IN) connector

When using an external contact signal as a trigger to start and stop recording, input the trigger signal here.

J MONITOR OUT connector

This can be used to output a monitor signal, which can be the input signal of any channel.

ATTENTION

Analog output amplifier (AR-LXAO1000) output is not synchronized.

K Input/output amplifier module slots

Install input/output amplifier modules here.

4-1-1. Indicators

STATUS

Lit red: Error
Blinking red: Warning
Blinking blue: Initializing
Lit green: Sync setting master (synchronized operation possible)
Blinking green: Sync setting master (synchronized operation not possible)
Lit white: Sync setting slave (synchronized operation possible)
Blinking white: Sync setting slave (synchronized operation not possible)

REC

Lit red: Recording
Blinking red: Record ready
Blinking yellow: Auto range function active

PLAY

Lit green: Playing back
Blinking green: Playback ready

SD

Lit blue: Media loaded
Blinking blue: Accessing media
Lit red: Medium full
Lit yellow: Media error
Blinking green: Files being transferred

MEMO[1)]

Lit green: Voice memo recording on
Blinking green[2)]: Voice memo being input when voice memo recording is on

PULSE

Lit green: Pulse recording on
Blinking green[3)]: Pulse being input when pulse recording is on
Lit red[3)]: Pulse data is exceeding the range maximum

GPS

Lit green: When GPS is on, data recording is on and satellite is captured
Blinking green: When GPS is on, data recording is on but satellite is not captured
Lit blue: When GPS is on, data recording is off and satellite is captured
Blinking blue: When GPS is on, data recording is off and satellite is not captured
Blinking red: When GPS is on, data recording is on, but GPS data cannot be acquired (cannot communicate with GPS unit)

1) During playback, this shows the playback data status.
2) This functions when record ready, recording and playing back.
3) This functions when record ready and recording.

4-2. Back

Main unit (LX-1000)

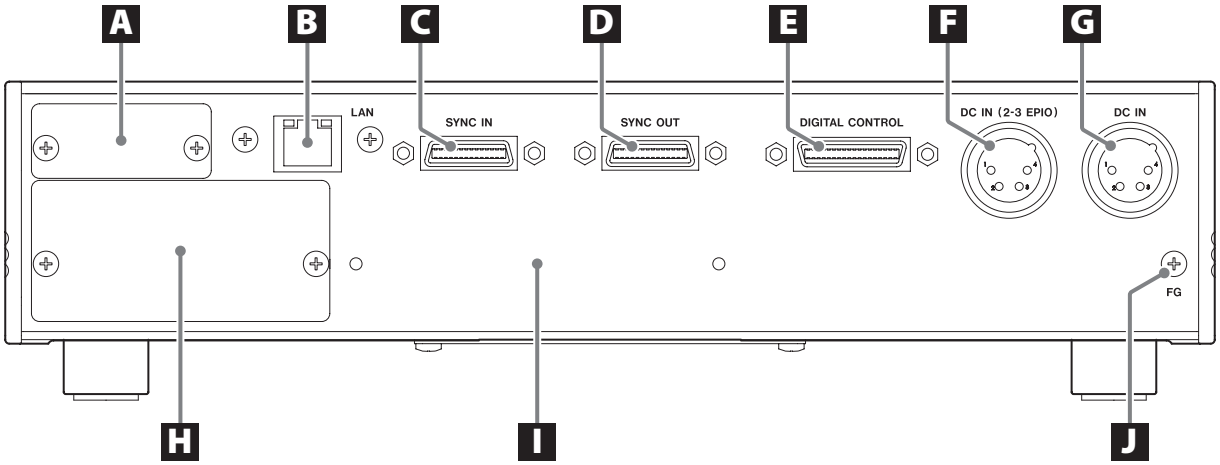

Expansion unit (AU-LX1000EPIO)

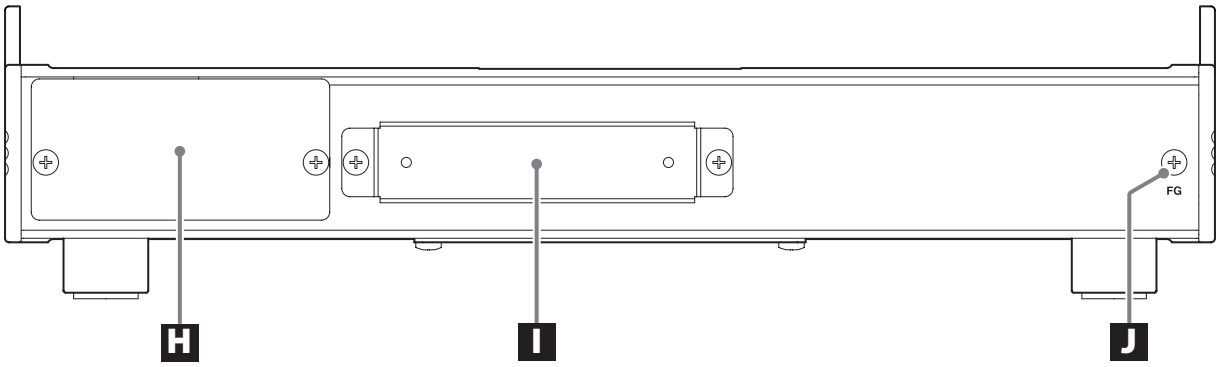

A Option slot

This slot is for options.

B LAN (1000BASE-T) connector

This is for an Ethernet connection. Use to connect the system with a computer.
The left LED lights when linked.
The right LED blinks when transmitting data.

- Use a category 7 LAN cable.

C SYNC IN connector for synchronized recording

Use to synchronize recording. Do not connect anything when not conducting synchronized recording.

D SYNC OUT connector for synchronized recording

Use to synchronize recording. Do not connect anything when not conducting synchronized recording.

E DIGITAL CONTROL input/output connector for external control

Use to control recording and playback with contact signals and to connect a remote control unit (option).

F Expansion unit DC power input (DC IN (2-3 EPIO)) connector

When using two or three AU-LX1000EPIO expansion units, use to input a power supply of 8–36 V.

G DC IN power input connector

Connect the included AC adapter here.
Use the optional DC power cable designed for this unit to supply DC 8–36V power. This can power the main unit (LX-1000) and a single expansion unit (AU-LX1000EPIO).

H Cooling fan installation panels

When using two or three AU-LX1000EPIO expansion units, install cooling fans in the units.

- When using any number of AR-LXST1000 modules, install a cooling fan.

I Connector covers

When using expansion units, attach the connector covers removed from the bottom of the main unit and the tops of the expansion units here for storage.

J FG (frame grounding) connector

Connect this to something suitable for grounding.
When using expansion units (AU-LX1000EPIO), connect all the FG (frame grounding) connectors of the main (LX-1000) and expansion units to something suitable for grounding.

4-3. Side

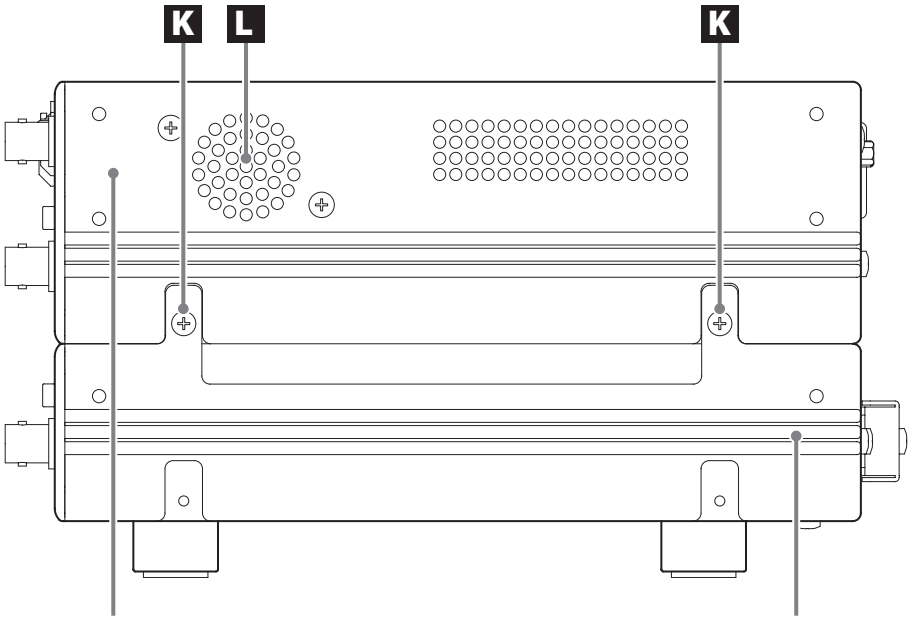

Main unit (LX-1000)

Expansion unit (AU-LX1000EPIO)

K Joints

Mechanically connect the main unit (LX-1000) to an expansion unit (AU-LX1000EPIO) and additional expansion units to each other in four places.

L Built-in speaker

This outputs voice memos.
When an earphone is connected to the earphone jack, no sound is output from this built-in speaker.

5. Connector specifications

5-1. GPS IN

Function

Use when connecting an LXGPS18X (5 Hz) GPS receiver (sold separately).

Connected type

Angled, half-pitch, 20-pin (Hirose DX10A-20S)

Pin assignments

Pin	Function
1	DC power supply output
2	DC power supply output
3	GPS serial input
4	GPS serial output
5	Ground
6	Reserved
7	Reserved
8	Reserved
9	Ground
10	Reserved
11	Reserved
12	Reserved
13	Reserved
14	Ground
15	PPS input for GPS
16	Reserved
17	Reserved
18	Reserved
19	Reserved
20	Ground

ATTENTION

- Do not connect anything to the Reserved pins.
- Pins 1 and 2 are specifically for the LXGPS18X (5 Hz) GPS receiver. Do not use them for any other purpose.

5-2. PULSE IN

Function

Use to input a pulse signal.

Input format

Input voltage: ±50V maximum (threshold ±20 V)
Input frequency: 450 kHz maximum

- The input voltage and input frequency have limits.

Threshold: ±0.5 V, ±1 V, ±2.5 V, ±5 V, ±10 V, ±20 V (switchable)

Connected type

BNC

5-3. External trigger signal input (TRIG IN)

Function

When using an external contact signal as a trigger to start and stop recording, input the trigger signal here.

Changing from H to L starts recording.
Changing from L to H stops recording.

External triggers must be turned on using the LXK Navi or remote control (optional) trigger settings screen.

Input circuit format

Input format

Input voltage range: 0–5 V
L level: 0.4 V or less
H level: open or 2 V or more

Connected type

BNC

Connection examples

Recording starts when the external trigger signal input reaches the L level. Use contact and non-contact (transistor or TTL open collector) to achieve L level.

Contact signal connection example

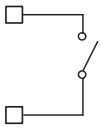

Transistor connection example

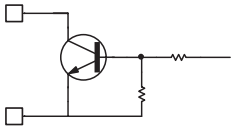

TTL open collector example

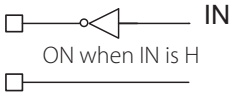

5-4. DIGITAL CONTROL input/output

Function

Use to control recording and playback with contact signals and to connect a remote control unit (option).

Contact input

REC_FWD, REC, FWD, STOP, PAUSE, MARK

Input format

Input voltage range: 0–5 V
L level: 0.4 V or less
H level: open or 2 V or more
Pulse width: 100 msec or more

Status output

REC, FWD, STOP, PAUSE

Output format

Maximum applied voltage: +5 V
Open drain, 8mA maximum sync current

Connected type

Angled, half-pitch, 36-pin (Hirose DX10A-36S)

Continued on the next page ➡

Pin assignments

Pin	Function
1	Power
2	Power
3	Reserved
4	Reserved
5	Ground
6	Reserved
7	Reserved
8	Ground
9	STOP input
10	FWD input
11	Reserved
12	MARK input
13	Reserved
14	STOP status
15	FWD status
16	Reserved
17	Reserved
18	Ground
19	Power
20	Power
21	Reserved
22	Reserved
23	Ground
24	Ground
25	Ground
26	Ground
27	REC input
28	PAUSE input
29	Reserved
30	REC_FWD input
31	Reserved
32	REC status
33	PAUSE status
34	Reserved
35	Reserved
36	Ground

ATTENTION

- Do not connect anything to the Reserved pins.
- Pins 1, 2, 19 and 20 are for an optional remote control unit. Do not use them for any other purpose.

5-5. DC IN power input

The DC IN power input connector can supply power to the main unit (LX-1000) and one expansion unit (AU-LX1000EPIO).
The DC IN (2-3 EPIO) expansion unit DC power input connector can supply power to the second and third expansion units (AU-LX1000EPIO).
These connectors have the same specifications.

Function

Input a voltage between 8 V and 36 V.

- These voltage values are the guaranteed operating range.

Connector

XLR (Neutrik NC4MPR-HD)

Pin assignments

Pin	Function
1	0V DC power supply
2	Reserved
3	Reserved
4	8–36V DC power supply

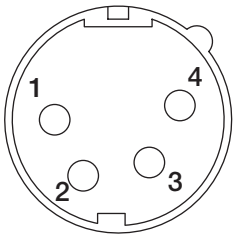

ATTENTION

Do not connect anything to the Reserved pins.

6-1. Handling SD cards

6-1-1. Handling SD cards

Avoid using SD cards that have adapters for microSD cards or miniSD cards.

6-1-2. Insertion and removal

Inserting SD cards

Insert SD cards when the unit is stopped.

1 Open the SD card slot cover of the LX-1000 unit.

2 Push the SD card all the way in.

- A clicking sound can be heard when the card is pushed all the way in.

3 Close the SD card slot cover of the LX-1000 unit.

Removing SD cards

Never remove an SD card when the unit is in use (including when recording, playing back or writing data).
Removing a card could cause recording to fail, recorded data to be lost and loud noises from the monitoring output, which could damage equipment.

1 Open the SD card slot cover of the LX-1000 unit.

2 Push the SD card in gently.

The SD card will come out part way.

3 Pull the SD card out by hand.

4 Close the SD card slot cover of the LX-1000 unit.

SD card write-protection switches

SD cards have write-protection switches.

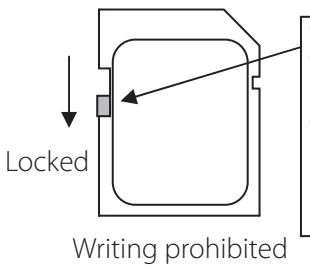

Write-protection switch
Writing data can be prohibited by moving the switch to the LOCK position.
- Slide the write-protection switch to one direction completely.

- To use an SD card for recording or to erase recording data on it or format it, unlock the write-protection.

6-2. Turning the power on

Check the connections between the main (LX-1000) and expansion (AU-LX1000EPIO) units, as well as the AC adapter connections and press and hold the STANDBY/ON button to turn the power ON.

This unit is operated using the included LXK Navi settings/waveform display software or an ER-LXRC1000 remote control unit (sold separately). For operation procedures, refer to the operation manual included with LXK Navi or the ER-LXRC1000.

6-3. Putting the system into standby

After confirming that the SD card is not being accessed, press and hold the STANDBY/ON button on the LX-1000 unit to put the system into standby.

ATTENTION

- If the system is put into standby while data is being written to the SD card, data recorded on it might become unreadable.
- Before moving the system, stop power supply to the AC adapters and DC IN connectors.

6-4. Initializing

All the settings of the main unit can be initialized to their factory default values.

NOTE

Use a long fine pin that fits the hole, such as a large straightened paper clip, to press the initialization switch.

1 Put the system into standby.

2 Turn the power on while pressing the initialization switch.

Keep pressing the initialization switch.

3 Stop pressing the initialization switch when all indicators on the main unit light.

7. Synchronization function

7-1. Connections

- Always turn the master and slave units off before connecting or disconnecting synchronization cables (sold separately).
- Use a synchronization cable to connect the master unit's synchronized recording output (SYNC OUT) connector to the slave unit's synchronized recording input (SYNC IN) connector.

Master unit

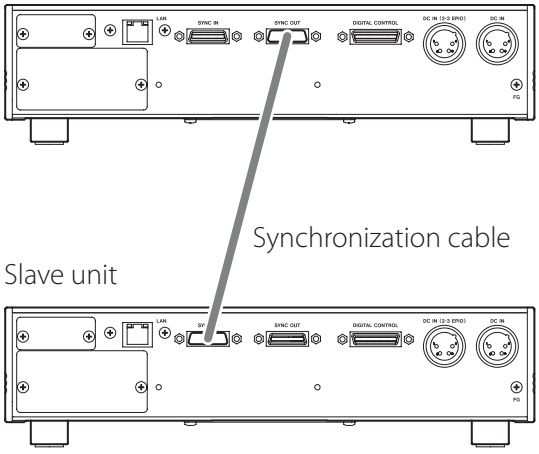

Synchronized recording with up to 4 units is possible.

Master unit

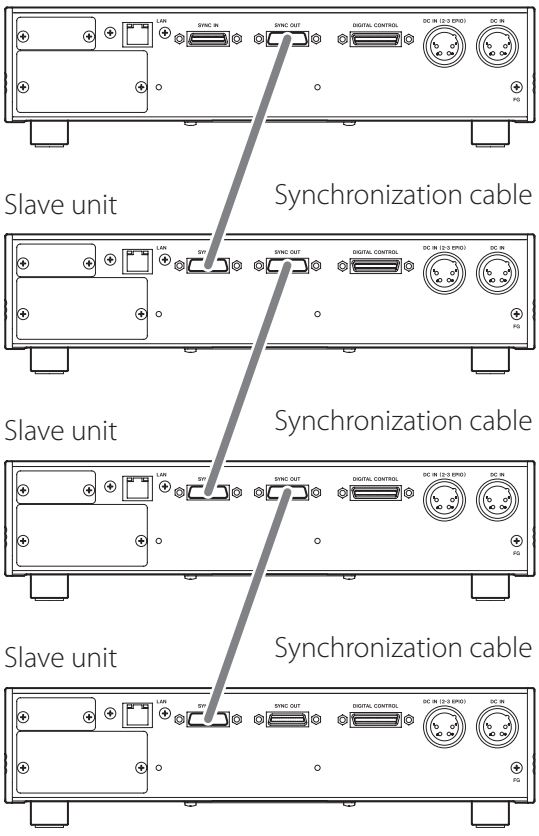

- When not using synchronized operation, do not connect the synchronization cables.

7-2. Making settings

Use the included LXK Navi settings/waveform display software or an ER-LXRC1000 remote control unit (sold separately) to make settings for master and slave units.
After making settings, check connections on the Sync settings screen for the master unit.

7-3. Turning the power on

After making sync settings, the master unit will automatically check settings when it starts up. Turn the slave units on before the master unit.
Connection checks will result in errors if the master unit is turned on before the slave units. If this occurs, conduct connection checks manually.

- The times of the master and slave devices are not synchronized automatically. Use LXK Navi or a remote control unit to match their times on the Sync settings screen.

ATTENTION

Always use the same versions of the firmware and software with the master and slave units. If the versions are different, they might not operate properly.

8-1. Main unit (LX-1000)

Recording media

SDHC/SDXC

SDHC/SDXC card slot	1
Compatible media	SDHC/SDXC
Recording capacity	8 GB – 128 GB
Speed class	Class 10 recommended

Media that has been verified to operate with this system

We provide a list of SD cards that we have verified for operation with this unit on our Information Products Division data recorders website.

https://datarecorder.jp/en/ You can also contact us. (For contact information, see the last page.)

Sampling frequencies and bandwidths

Series ①: Corresponds to DAT/audio sampling frequencies

Series ②: Corresponds to integer frequencies

Series ③: Corresponds to frequency axis resolution during 2^N FFT analysis

Series ④: Corresponds to frequency axis resolution during 2^N FFT analysis

Series ⑤: Down-sampling executed using software processing (1kHz sampling frequency)

Series ①		Series ②		Series ③		Series ④		Series ⑤	
Fs (kHz)	Bandwidth (kHz)	Fs (kHz)	Bandwidth (kHz)	Fs (kHz)	Bandwidth (kHz)	Fs (kHz)	Bandwidth (kHz)	Fs (Hz)	Bandwidth (Hz)
96.00	40.00	100.00	40.00	102.40	40.00	65.536	25.60	500	200
48.00	20.00	50.00	20.00	51.20	20.00	32.768	12.80	200	80
24.00	10.00	20.00	8.00	25.60	10.00	16.384	6.40	100	40
12.00	5.00	10.00	4.00	12.80	5.00	8.192	3.20	50	20
6.00	2.50	5.00	2.00	5.12	2.00	4.096	1.60	10	4
3.00	1.25	2.00	0.80	2.56	1.00	2.048	0.80	5	2
1.50	0.625	1.00	0.40	1.28	0.50	1.024	0.40	1	0.4

Number of channels that can be recorded simultaneously (when not using CAN recording)

Fs (kHz)				Number of channels	
Series ①	Series ②	Series ③	Series ④	16-bit	24-bit
96.00	100.00	102.40	65.536	16-ch	8-ch
48.00	50.00	51.20	32.768	32-ch	16-ch
24.00	20.00	25.60	16.384	64-ch	32-ch
12.00	10.00	12.80	8.192	66-ch	64-ch
6.00	5.00	5.12	4.096	66-ch	66-ch
3.00	2.00	2.56	2.048	66-ch	66-ch
1.50	1.00	1.28	1.024	66-ch	66-ch

Fs (Hz)	Number of channels	
Series ⑤	16-bit	24-bit
500	66-ch	66-ch
200	66-ch	66-ch
100	66-ch	66-ch
50	66-ch	66-ch
10	66-ch	66-ch
5	66-ch	66-ch
1	66-ch	66-ch

ATTENTION

The following warnings apply to Series ⑤.

- Monitor output and analog output amplifier output differ during recording and playback as follows.
  During recording: Data is output before down-sampling.
  During playback: Data is output after down-sampling.
- During playback, the sampling frequency is always 1 kHz. For example, data recorded at 100 Hz will be played back at 10 times speed.
- Aliasing could occur with sampling frequencies of 5 Hz or less.

Recording time (when not using CAN recording)

The following tables show approximate recording times for different media capacities according to the combination of sampling frequency, recording bit depth and number of recording channels.

Approximate total 16-bit recording times for a 32GB SD (in hours:minutes:seconds)

Fs (kHz)	Bandwidth (kHz)	4-ch	8-ch	16-ch	32-ch	64-ch
96.00	40.00	11:26:10	5:44:51	2:52:53	–	–
48.00	20.00	22:38:19	11:26:10	5:44:51	2:52:53	–
24.00	10.00	44:22:18	22:38:19	11:26:10	5:44:51	2:52:53
12.00	5.00	85:19:48	44:22:18	22:38:19	11:26:10	5:44:51
6.00	2.50	158:28:12	85:19:48	44:22:18	22:38:19	11:26:10
3.00	1.25	277:19:22	158:28:12	85:19:48	44:22:18	22:38:19
1.50	0.63	443:42:59	277:19:22	158:28:12	85:19:48	44:22:18

Approximate total 24-bit recording times for a 32GB SD (in hours:minutes:seconds)

Fs (kHz)	Bandwidth (kHz)	4-ch	8-ch	16-ch	32-ch	64-ch
96.00	40.00	5:44:51	2:52:53	–	–	–
48.00	20.00	11:26:10	5:44:51	2:52:53	–	–
24.00	10.00	22:38:19	11:26:10	5:44:51	2:52:53	–
12.00	5.00	44:22:18	22:38:19	11:26:10	5:44:51	2:52:53
6.00	2.50	85:19:48	44:22:18	22:38:19	11:26:10	5:44:51
3.00	1.25	158:28:12	85:19:48	44:22:18	22:38:19	11:26:10
1.50	0.63	277:19:22	158:28:12	85:19:48	44:22:18	22:38:19

- The recording times given in the above tables are approximations. Actual recording times might differ depending on the recording media used.
- The above times are total possible recording times for the media. They are not continuous recording times.
- The number of recording channels is the total number of analog input channels and pulse input channels.
- You can use the following formula as a guide to calculate approximate recording times for other recording media.

  Approximate recording time (seconds) = effective recording capacity/(sampling frequency in Hz × number of channels × analog-digital conversion bit depth in bytes + 8000)

  Effective recording capacity: recording capacity – reserved space (in bytes)
  Recording capacity: nominal media capacity in bytes (example: 32 GB = 32×1000×1000×1000)
  Reserved space: approximately 50 MB for headers and other files besides user data
  Analog-digital conversion bit depth: number of bytes for the quantization bit depth (4 for 24-bit or 2 for 16-bit)
  8000: voice memo transmission speed at 8 kHz fixed sampling frequency with 8-bit quantization (8000 bytes/sec)

Calculation example

The recording time for 32GB capacity with 8 recording channels at 96kHz sampling frequency and 16-bit quantization is calculated as follows.

Recording time (seconds) = (32 × 1000 × 1000 × 1000 − 50 × 1024 × 1024)/(96 × 1000 × 8 × 2 + 8000) = 20691 (seconds) = 5:44:51

Voice memo input and output

Sampling frequency ..... 8 kHz
Quantization bit depth 8-bit
File format ..... WAV file
Number of voice memo input channels. ..... 1 (mono)
Mic input jack connector ..... 3.5mm TS mini jack
Earphone jack connector ..... 3.5mm TS mini jack

- Speaker output is disabled when an earphone is connected.

Voice memo output volume adjustment function

The output level can be adjusted using the LXK Navi application or an optional remote control unit.

Voice memo or monitoring signal selection function

The signal source for voice memo output can be set to either the voice memo or the monitoring output.

Internal clock

Clock precision ..... ±2 PPM (at 25°C)
Battery life ..... 5 or more years

External interfaces

LAN ..... 1000BASE-T connector × 1
RJ-45

DIGITAL CONTROL
External control input/output connector × 1
Angled, half-pitch, 36-pin
Hirose DX10A-36S
For optional remote control unit (ER-LXRC1000)

TRIG IN ..... External trigger signal input connector × 1
BNC connector

SYNC IN... Recording synchronization input connector × 1
Angled, half-pitch, 28-pin
Hirose DX10A-28S

SYNC OUT
Recording synchronization output connector × 1
Angled, half-pitch, 28-pin
Hirose DX10A-28S

FG ..... Frame grounding terminal(s)
GPS IN ..... GPS connector × 1
Angled, half-pitch, 20-pin
Hirose DX10A-20S

PULSE IN ..... Pulse input connectors × 2
BNC connector

8-2. General

External dimensions (W × H × D, not including protrusions)/weight*

LX-1000 ..... 300 × 65 × 200 mm /3.1 kg
AU-LX1000EPIO..... 300 × 44 × 200 mm/2.3 kg
*This weight is when 4 AR-LXPA1000 analog input amplifiers are installed. Not including AC adapters, media and optional boards.
Expansion unit connection screws M3 × 5 (countersunk)
Rubber feet attachment screws..... M3 binding × 8

DC power supply input

Rated input voltage..... DC 9–34 V
Guaranteed operating input voltage range .. DC 8–36 V

Power consumption

16-channel model..... approx. 30 W (AR-LXPA1000 × 4)
32-channel model..... approx. 47 W (AR-LXPA1000 × 8)
48-channel model..... approx. 64 W (AR-LXPA1000 × 12)
64-channel model..... approx. 81 W (AR-LXPA1000 × 16)

Included AC adapter

Rated input voltage..... AC 100–240 V
Input voltage range ..... AC 90–264 V
Input power supply frequency..... 50/60 ±3 Hz
Rated output voltage..... 16 V
Rated output current ..... 6.5 A
External dimensions (W × H × D) .... 68 × 35 × 153 mm
Weight ..... 650 g or less

Operating conditions

Operating temperature/humidity range
0 to 40°C/10 to 80% (no condensation)
Storage temperature/humidity range
–20 to 60°C/5 to 90% (no condensation)
Operating air pressure range..... 860–1060 hPa
Vibration resistance... MIL-STD-810E Figure 514.4-1, 2, 3

- Confirm the operating conditions of each type of recording media.

Note

Cooling fan life ..... 30,000 hours (fan alone at 20°C)

8-3. Included accessories

LXK Navi application for settings and waveform display.. 1
Microphone ..... 1 (for voice memos)
Earphone..... 1
CD-ROM..... 1
Contents: Instructions for Use (this document), LXK Navi software, LXK Navi Instructions for Use
Connection reference sheet ..... 1 (printed edition)
AC adapter
LX-1000 only..... 1
System with LX-1000 and one AU-LX1000EPIO unit 1
System with LX-1000 and two AU-LX1000EPIO units ... 2
System with LX-1000 and three AU-LX1000EPIO units.. 2
AC adapter power cords ..same as number of AC adapters
Front handle (TZ-LXFH1000) 1

8-4. Pulse input

Number of input channels 2
Input connector type ..... BNC
Input format .....unbalanced
Input impedance ..... 100 kΩ
Input voltage ..... ±50V maximum (threshold ±20 V)
Input frequency ..... 450 kHz maximum
● The input voltage and input frequency have limits.
Threshold ..... ±0.5 V, ±1 V, ±2.5 V, ±5 V, ±10 V, ±20 V (switchable)
Division ratio setting 1–255
Moving average 1, 2, 4, 8, 16

Measurement modes
(1) Count (gate) mode
Measurement range: 1–255× sampling frequency
Measurement precision: ±5 counts
(2) Count (total) mode
Measurement precision: ±5 counts
(3) Period mode
Measurement ranges: 1 msec, 5 msec, 10 msec, 50 msec, 100 msec, 500 msec, 1 sec
Measurement precision: ±0.2% (using 24-bit AD)
±0.3% (using 16-bit AD)
(4) Frequency mode
Measurement range: 10 Hz, 20 Hz, 50 Hz, 100 Hz, 200 Hz, 500 Hz, 1 kHz, 2 kHz, 5 kHz, 10 kHz, 20 kHz
Measurement precision: ±0.2% (using 24-bit AD)
±0.3% (using 16-bit AD)
(5) rpm mode
Measurement ranges: 1500 rpm, 3000 rpm, 6000 rpm, 9000 rpm, 12000 rpm, 15000 rpm, 18000 rpm, 24000 rpm
Number of pulses per revolution setting 1–255
Measurement precision: ±0.2% (using 24-bit AD)
±0.3% (using 16-bit AD)

● The measurement precision of each mode does not include sampling frequency series Ⓢ.

ATTENTION

● In period mode, frequency mode and rpm mode, the least significant 1 bit is used for pulse timing. When a pulse is detected, the timing value is 1. At all other times it is 0.
● Pulse timing is disabled when using sampling frequency series Ⓢ.
● The recorded pulse input signal cannot be played back.
● Aliasing could occur.
● Analog signal and pulse data sampling are not synchronized.
● In count (total) mode, period mode, frequency mode and rpm mode, if pulse input ceases while recording, the last pulse data will be retained.

8-5. Synchronized recording

Number of synchronized recording units ...4 maximum
Phase difference between input channels
5° or less
(identical input range, 20kHz bandwidth or lower)
7° or less
(identical input range, 40kHz bandwidth)

● When using TZ-LXSY1000 synchronization cables

8-6. Input/output amplifier modules

AR-LXPA1000 analog input amplifier

Input signal type ..... DC, AC, IEPE
Number of input channels 4
Input connector ..... BNC (Z=50Ω type)
Input format ..... unbalanced
Input impedance ..... 1 MΩ
Input range ..... ±0.1/0.2/0.5/1/2/5/10/50 V
HPF ..... OFF, 5 Hz (–18dB/oct Butterworth filter)
Weighting ..... FLAT, A, C (IEC TYPE 1 compliant)
Absolute maximum input voltage ..... ± 50 V
(0.1V/0.2V/0.5V/1V/2V/5V/10V input ranges)
±100 V (50V input range)
Input level LEDs
Lights green when input level exceeds 10% of its input range
Lights red when it exceeds 115%
Input signal quantization bit depth 16/24-bit
Extended range ..... ±127% (of rated range)
Analog-digital conversion method
ΔΣ conversion method
(with simultaneous sampling and anti-aliasing filter)
Input frequency flatness characteristics (In AC mode, 1 Hz or higher)
10 V or less input range: ±0.5 dB
50V input range, 20kHz bandwidth or lower: ±1 dB
50V input range, 40kHz bandwidth: ±2 dB
Input range precision ..... ±2%
Phase difference between input channels (identical input range)
10V or lower input range, 20kHz bandwidth or lower: 1° or less
10V or lower input range, 40kHz bandwidth: 3° or less
50V input range: 3° or less
Dynamic range ..... 125 dB or more
(24-bit, 5V input range, 51.2kHz sampling frequency, input short, 3200-line FFT noise peak level)
Crosstalk ..... –98 dB or lower
(1 kHz, 24-bit, 1V input range)
Distortion ..... 0.1% or less (1 kHz)
IEPE sensor power supply ..... DC 24 V/4 mA
IEPE sensor disconnection detection
Detection function included for each channel
(Yellow LED blinks when disconnected)
TEDS ..... Supports TEDS Ver. 1.0.

AR-LXST1000 strain input amplifier

Input signal type ..... Strain/DC
Number of input channels 4
Input format ..... unbalanced, DC coupled
Input impedance ..... 1 MΩ
Absolute maximum input voltage ..... ±25 V
Input level LEDs
Lights green when input level exceeds 10% of its input range
Lights red when it exceeds 115%
Linearity ..... ±0.1%
Extended range ..... ±127% (of rated range)
Input signal quantization bit depth 16/24-bit
Analog-digital conversion method . ΔΣ conversion method
(with simultaneous sampling and anti-aliasing filter)
LPF ..... –48dB/oct Butterworth response, switched capacitor type, 4-channel independent, 10Hz/30Hz/100Hz/300Hz/1kHz/3kHz/10kHz/30kHz/Pass cutoff frequencies
Input connector ..... 7-pin Lemo, Ø10 (EGG0B type)
Pin assignments

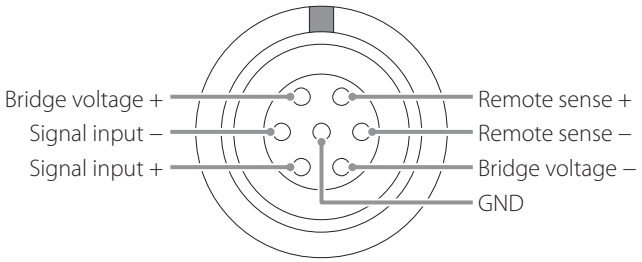

Strain mode

Input range[1] ... ±500/1000/2000/5000/10000/20000/50000/100000 µst
Input range precision[2, 3] ..... ±1%
Input frequency flatness characteristics
Input range 20000 µst or higher ..... ±0.5 dB
Input range 10000 µst or lower
20kHz bandwidth or lower ..... +0.5 to –1 dB
40kHz bandwidth ..... +0.5 to –2 dB
Gauge ratio 2.0
Bridge voltage ..... 2/10 V
(DC bridge format)
Bridge connection ..... Full bridge
Applicable gauge resistance
2V bridge voltage ..... 120–1000 Ω
10V bridge voltage ..... 350–1000 Ω
Remote sense ..... Included
Balance adjustment method
Electronic automatic balancing
Balance adjustment range ..... ±10000 µst
(when 2V bridge voltage)

DC mode

Input range ..... ±1/2/5/10 V
Input range precision[2] ..... ±1%
Input frequency flatness characteristics ..... ±0.5 dB
Dynamic range ..... 110 dB or more
(24-bit, 5V input range, 51.2kHz sampling frequency, LPF off, input short, 3200-line FFT noise peak level)
Crosstalk ..... –90 dB or lower
(1 kHz, 24-bit, 1V input range)

1 Since LEDs could light for channels that do not have inputs connected depending on the setting range, set the maximum range to 100000 µst.
2 After warming up for at least 30 minutes.
3 When automatic balancing is conducted.

AR-LXAO1000 analog output amplifier

Number of output channels 4
Output connector ..... BNC (Z=50Ω type)
Output format ..... Unbalanced
Output impedance ..... 50 Ω
Output range ..... ±1 – 5 V (adjustable in 0.1V steps)
Maximum output current ..... 10 mA
Output level LEDs
Lights green when output level exceeds 10% of its output range
Lights red when it exceeds 115%
Output signal quantization bit depth 16/24-bit
Extended range ..... ±127% (of rated range)
Digital-analog conversion method . ΔΣ conversion method
Output frequency flatness characteristics
20kHz bandwidth: ±0.15 dB
40kHz bandwidth: ±0.30 dB
Phase difference between output channels
1 degree or less
Output range precision ..... ±1% (5V output range)
S/N ratio.100 dB or more (within band, 5V output range)
Crosstalk ..... –95 dB or lower
(within band, 1kHz signal, 5V output range)
Distortion ..... 0.01% or less
(within band, 1kHz signal, 5V output range)

ATTENTION

Monitor output is not synchronized.

AR-LXCAN1000 CAN module

Number of input ports 2
Input connector ..... D-sub 9-pin
Supported protocols ..... CAN 2.0A (11-bit identifiers)
CAN 2.0B (29-bit identifiers, extended format)
ISO 11898-1:2015 (CAN FD)
Baud rate[4] ..... 125 kbps, 200 kbps, 250 kbps, 500 kbps, 800 kbps, 1000 kbps, 1250 kbps, 1600 kbps, 2000 kbps, 2500 kbps, 4000 kbps, 5000kbps
ID filtering number 32/port
Bus mode ..... Normal/Listen only
Thinning out
10 ms, 20 ms, 50 ms, 100 ms, 200 ms, 500 ms, 1 s, 2 s, 5 s
Terminator ..... Switchable
Maximum recording rate ..... Set separately by port
Insulation ..... Between ports

Pin assignments

Pin	Function
1	Reserved
2	CAN Low
3	CAN ground
4	Reserved
5	CAN cable shield
6	Reserved
7	CAN High
8	Reserved
9	Reserved

LED
BUS
Lit green: Receiving CAN data
STS
Lit yellow: Over 80% of maximum recording rate
Lit red: Exceeding maximum recording rate

ATTENTION

Do not connect anything to the Reserved pins.

4 Conditions could limit the actual possible recording speed.

8-7. Options

Remote control unit ER-LXRC1000
Cooling fan unit TZ-LXFAN1000
Battery unit BU-LX1000
Battery pack NP-7LS
Battery charger JL-2PLUS
GPS receiver ..... LXGPS18X (5 Hz)
Carrying case (for 16-channel model) CS-LX1016
Carrying case (for 32-channel model) CS-LX1032
Vehicle adapters ..... TZ-LXVMK series
DC power cable ..... CL-DRDC
Synchronization cable TZ-LXSY1000

- In order to improve the products, specifications and appearance could be changed at any time without warning.
- Weight and dimensions are approximate.
- Illustrations in this document might differ in part from the actual products.

9. Exterior drawings

The following illustrations are examples of systems with AR-LXPA1000 units installed in all the input/output amplifier module slots.
The configuration of input and output amplifier modules depend on the content at the time of order.

- When any number of AR-LXST1000 modules are installed, also install a cooling fan.

16-channel model

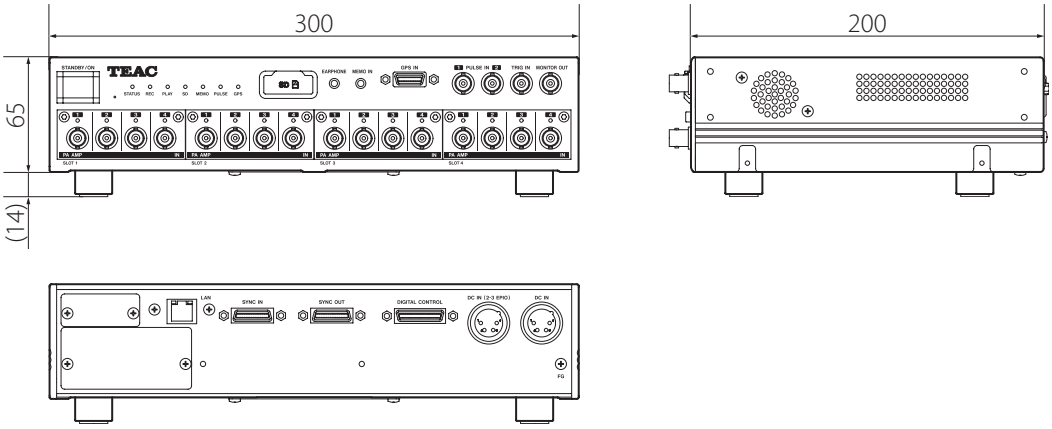

32-channel model

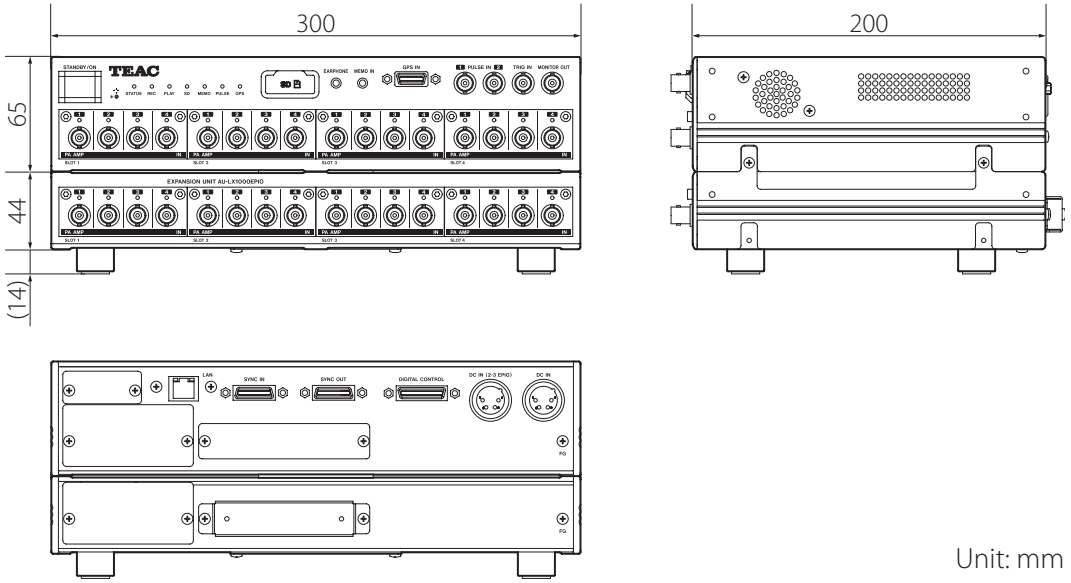

Unit: mm

9. Exterior drawings

48-channel model

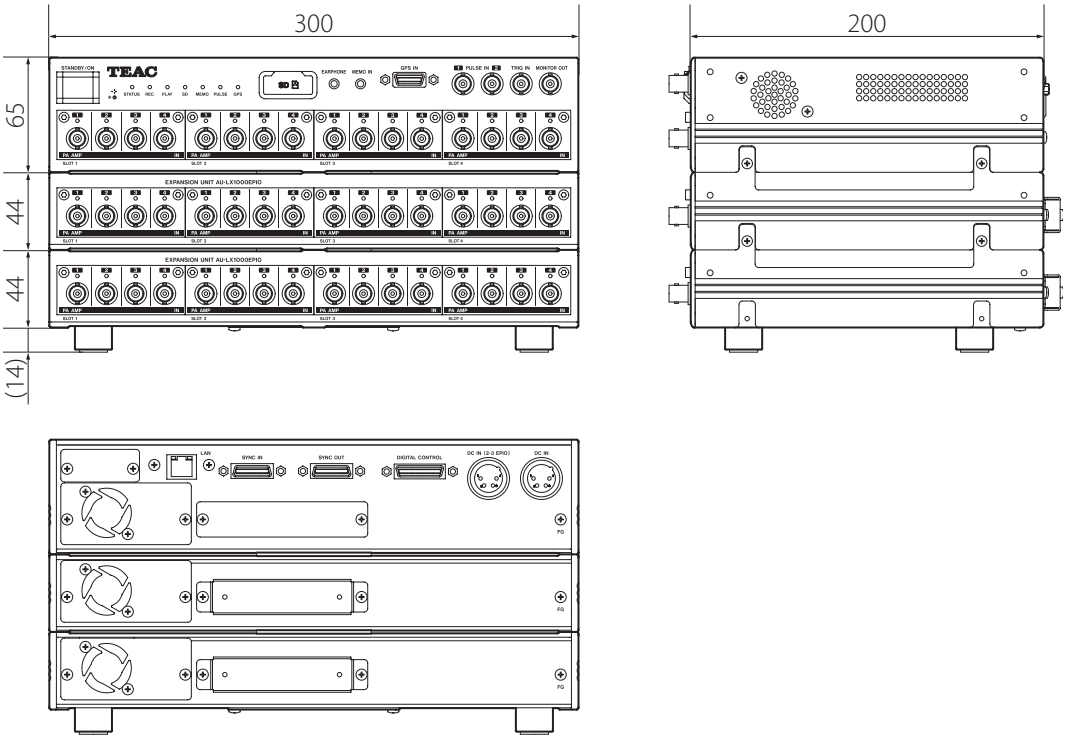

64-channel model

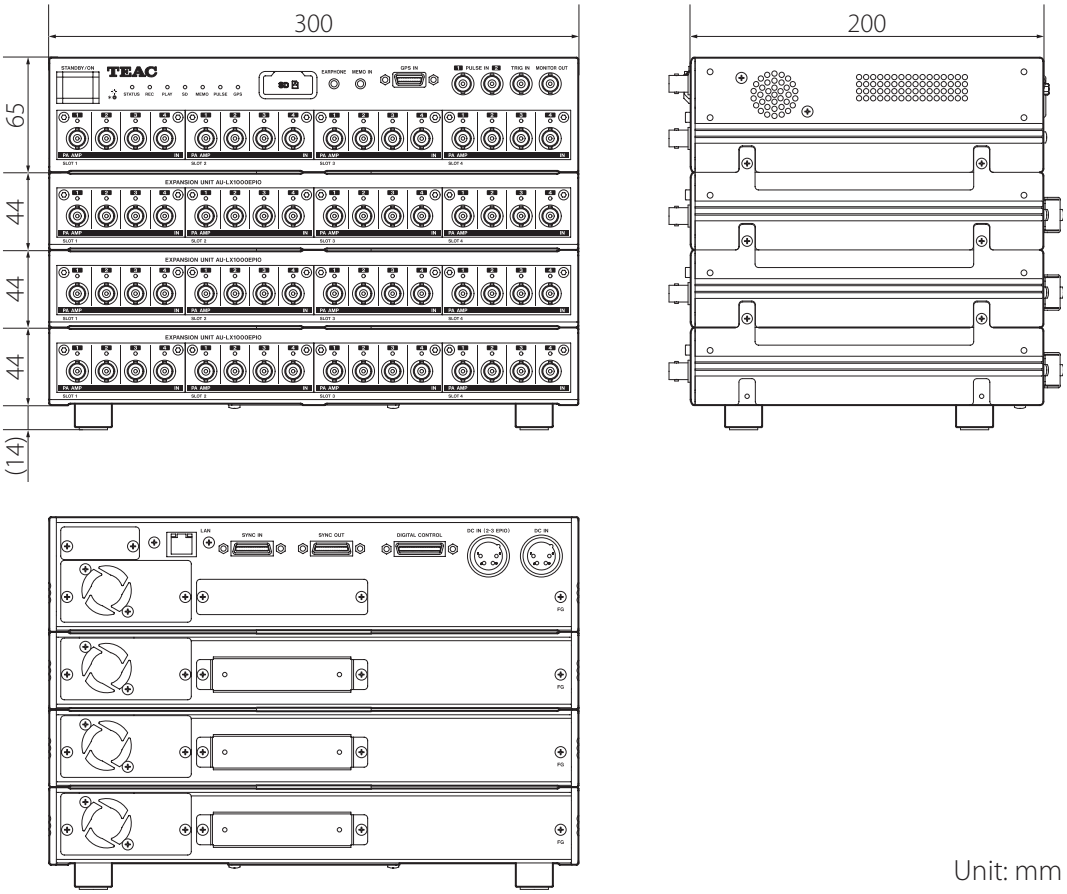

Unit: mm

10. Troubleshooting

If any of these problems should occur, please check the following before requesting service.

Problem	Possible causes and responses
Power will not turn on	● Are the AC adapters connected correctly?
	● Is the DC power supply voltage too low?
The LX-1000 unit is not recognized by LXK Navi	● Are the LAN cables connected correctly?
	● Are the IP address, subnet mask and other item set correctly?
	● Is it blocked by a computer firewall?
	● Try turning the LX-1000 off and on again, and then restart LXK Navi.
Recorded files cannot be played	If the recording of a file was not completed properly because of a power interruption, for example, that file cannot be played back by this unit. Use a TAFFmat viewer on a computer to show it.

If you are still unable to fix the problems after checking the above, please contact us. (For contact information, see the last page.)

Built-in battery

This system has a battery to run the built-in clock. If this battery dies, the system will become unable to retain accurate time, which will affect recording data. We recommend replacing it before it dies (every 5 years). Please contact us when changing the battery becomes necessary.

11. Warranty explanation

- The warranty period for this device is one year from the date of purchase.

- Be aware that repairs will require payment in the following cases even during the warranty period.
  1) Malfunction or damage due to misuse
  2) Malfunction or damage caused by modifications or repairs conducted by any party other than our company or a service person designated by our company
  3) Malfunction or damage caused by dropping, transportation or similar handling after product delivery
  4) Malfunction or damage caused by fire, earthquake, water, lightning or other natural disaster
  5) Malfunction or damage caused by external factors, including power supplies and equipment environmental conditions, that deviate from the operation requirements of this product
  6) Malfunction or damage if the product was not purchased from our company or an agent designated by our company

- We offer paid service after the conclusion of the warranty period. For details, please contact the retailer where you purchased the unit or a contact on the back cover of this manual.

- Be aware that our company will bear no responsibility for any secondary damages resulting from the operation of this device or related to data.

- Be aware that our company will bear no responsibility if data recorded by this device is deleted as a result of misoperation or unexpected incident, for example.

- Information is given about products in this manual only for the purpose of example and does not indicate any guarantees against infringements of third-party intellectual property rights and other rights related to them. TEAC Corporation will bear no responsibility for infringements on third-party intellectual property rights or their occurrence because of the use of these products.

TEAC

TEAC CORPORATION	1-47 Ochiai, Tama-shi, Tokyo 206-8530, Japan	Phone: +81-42-356-9154
TEAC AMERICA, INC.	10410 Pioneer Blvd. Unit #1, Santa Fe Springs, California 90670, U.S.A.	Phone: +1-323-726-0303
TEAC EUROPE GmbH. (EU Importer)	Bahnstrasse 12, 65205 Wiesbaden-Erbenheim, Germany	Phone: +49-(0)611-7158-349
TEAC UK Limited (UK Importer)	Luminous House, 300 South Row, Milton Keynes, Buckinghamshire, MK9 2FR, UK	Phone: +44-1923-797205
TEAC SALES & TRADING (ShenZhen) CO., LTD.	Room 817, Xinian Center A, Tairan Nine Road West, Shennan Road, Futian District, Shenzhen, Guangdong Province 518040, China	Phone: +86-755-88311561-2

0722.MA-2953H